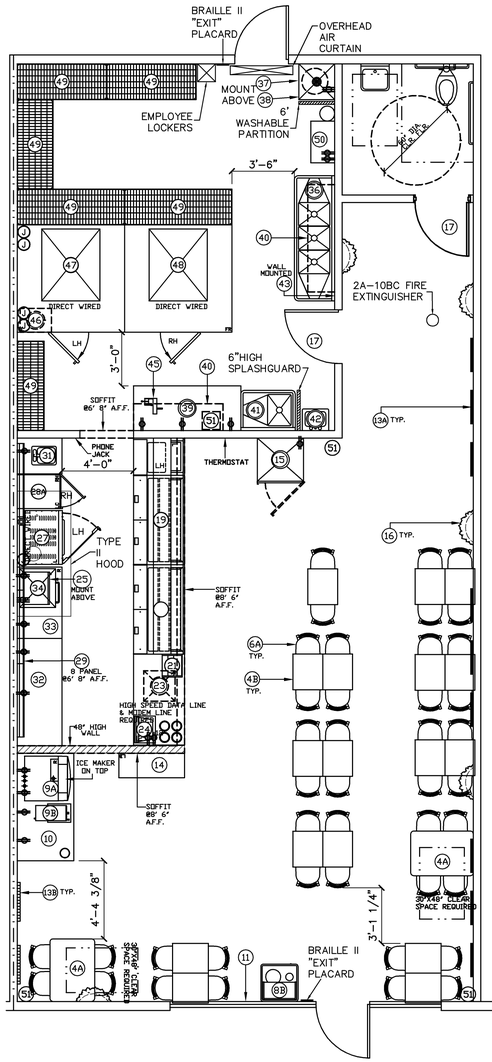

1 FURNITURE AND EQUIPMENT PLAN

SCALE: 1/4" = 1'

FURNITURE AND EQUIPMENT LEGEND

#	ITEM	MANUFACTURER	ORDERED FROM	QTY.	DESCRIPTION
					CUSTOMER AREA
4A	30" X 42" TABLE	PLYMOLD	DAI	2	30" HIGH W/ (1) VERTICAL TABLE LEG AT EACH OF THE 4 CORNERS. FONT HILL PEAR LAMINATE WITH BLACK DURA EDGE.
4B	20" X 24" TABLE	PLYMOLD	DAI	22	30" HIGH W/ FREESTANDING 22" X 22" CROSS BASE. FONT HILL PEAR LAMINATE WITH BLACK DURA EDGE.
6A	CHAIR	PLYMOLD	DAI	52	GUEST CHAIR W/ UPHOLSTERED SEAT OR DUR-A-SEAT TO BE ORDERED IN THE FOLLOWING COLORS: CROCUS, SPICE AND SLATE. FRAME COLOR IS BLACK WRINKLE.
6B	TRASH/RECYCLE RECEPTACLE	PLYMOLD	DAI	1	DOUBLE HOLE RECYCLE/TRASH UNIT. 25" X 25" BLACK DURA EDGE TRASH RECEPTICLE W/FONT HILL PEAR LAMINATE FINISH.
9A	SODA FOUNTAIN	CORNELIUS	DAI	1	DEDICATED 115V, 20 AMP DUPLEX OUTLET (NEMA 5-20R) W/IN 3 FEET, 3 INCH OR LARGER FLOOR SINK W/IN 3 FEET (EQUIPMENT INSTALLED BY COKE).
9B	TEA/COFFEE BREWER	BUNN-O-MATIC CORP.	DAI	1	DEDICATED 120V, 15 AMP DUPLEX OUTLET (NEMA 5-15P) W/IN 3 FEET. PLUMBING 20-90 PSI. MODEL SUPPLIED WITH 1/4" MALE FLARE FITTING. MIN. 1GPM WATER FLOW.
10	BEVERAGE DESTINATION CENTER	DUKE MANUFACTURING	DAI	1	(✓)RH ( )LH BEVERAGE PLACEMENT ( )48" ( )60" (✓)72" ( )84" ( )96" ( )108" ( )120". STAINLESS STEEL TOP. FONT HILL PEAR LAMINATE FINISH. INSTALLED BY G.C.
11	RED NEON "OPEN" SIGN	ZEON CORP/NEON DISPLAY/NEON GLASS WORKS	DAI/G.C.	1	SEE MANUFACTURER FOR SPECS. 220V. INSTALLED BY G.C.
13A	WALL ART-VERTICAL	SUNGLO FABRICS	DAI	9	23" X 50" WALL HUNG PRINT(S) ON STYRENE-FACED FOAMBOARD FRAMED IN BLACK METAL. MOUNTING HARDWARE INCLUDED. EIGHT DIFFERENT PRINT IMAGES AVAILABLE.
13B	WALL ART-SQUARE	SUNGLO FABRICS	DAI	2	26" X 26" WALL HUNG PRINT(S) COLOR PHOTOS DOUBLE MATTED IN A BLACK WOODEN FRAME. MOUNTING HARDWARE INCLUDED. EIGHT DIFFERENT PRINT IMAGES AVAILABLE.
14	CHIP RACK	FRITO-LAY	DAI	1	( )44"W X 16 3/8"D X 68"H (✓)44"W X 16 3/8"D X 54"H ( )33 1/4"W X 16 3/8"D X 68"H FLOOR RACKS. / ( )24"W X 12"D X 22"H ( )36"W X 12"D X 22"H COUNTERTOP RACKS. THROUGH LOCAL DIST.
15	DISPLAY REFRIGERATOR	TRUE	DAI	1	(✓)1 DOOR FLOOR MODEL. ( )2 DOOR MODEL. DEDICATED 115V, 15 AMP DUPLEX OUTLET (NEMA 5-15R) W/IN 6 FEET.
16	WALL PLANT	GRACE DESIGNS	DAI	5	WALL HUNG SILK PLANT. MOUNTING BRACKET TO BE HUNG 15" BELOW THE TOP OF THE UPPER DECORATIVE MOLDING (REFER TO TUSCANY II BACK-UP SHEET #1)
17	INTERIOR DOOR	LOCAL	G.C.	2	SOLID CORE HARDWOOD DOOR (SLAB OR PANEL CONSTRUCTION) STAIN MOHAWK #235 CHERRY & POLYURETHANE W/ MOHAWK FAST DRYING SATIN METAL FRAME (PAINT SHERWIN WILLIAMS #SW6356 COPPER MOUNTAIN) LEVER HANDLE. INSTALLED BY GC.
					SERVICE AREA
19	FRONT COUNTER	DUKE MANUFACTURING	DAI	1	TOTAL LENGTH(7' 2'. (✓)LH ( )RH .25" HOT FOOD UNIT (2).60" COLD PAN UNIT .61" CASH UNIT. N/A HOT FOOD EXTENSION N/A CASH EXTENSION N/A BEVERAGE EXTENSION. INSTALLED BY G.C. ULS APPROVED. ELECTRICAL CONNECTIONS AND WIRING TO LOCAL AND STATE CODE REQUIREMENTS AS DETERMINED BY G.C. OR ELECTRICIAN.
21	COOKIE DISPLAY CASE	ADVANCED DISPLAYS IN PLASTICS, INC	DAI	1	DISPLAY CASE ON TOP OF SUB-WRAP AND NAPKIN RISER. MADE OF CLEAR ACRYLIC.
23	SAFE	C.S.S./TIDEL	DAI	1	(✓)TIME LOCK ( )QUICK DROP ( )TIDEL TACC. INSTALLED BY G.C. IN SERVICE AREA.
24	SUBSHOP 2000 P.O.S.	MICROS SYSTEMS/DELL/SUBTOTAL	DAI	1	PC BASED POINT OF SALE SYSTEM. REQUIRES DEDICATED POWER SOURCE WITH ISOLATED GROUND TO BREAKER.
25	MICROWAVE	AMANA/SHARP	DAI	1	#5-20R OUTLET REQUIRED. 1200 WATT, 120V/60HZ/1PH, 20 AMP CIRCUIT. DEDICATED CIRCUIT REQUIRED.
27	BREAD OVEN	NU-VU	DAI	1	NU-VU. DEDICATED CIRCUIT REQUIRED. DIRECT WIRED. INSTALLED BY G.C. NSF APPROVED. #1/4" WATERLINE IS REQUIRED.
29A	COMBI BREAD CABINET	LOCKWOOD	DAI	1	(✓)RH ( )LH COMBINATION CABINET. INTEGRATED OPEN AIR COOLING RACK ABOVE WITH ENCLOSED CABINET BELOW. INSTALLED BY G.C.
29	MENUBOARD	VGS / TRANSLITE SONOMA	DAI	4	MENUBOARD: ( )2" X 4' ( )2' X 2'. LIGHT FIXTURES: ( )2' ( )4' ( )8' ( )16' MOUNT TO TOP OF MENUBOARD. SINGLE OUTLET REQUIRED. INSTALLED BY G.C.
31	BACK COUNTER W/ HAND SINK	DUKE MANUFACTURING	DAI	1	( )RH ( )LH (✓)CENTER HAND SINK.(✓)24" ( )36" ( )48" ( )60" ( )72" LENGTH. STAINLESS STEEL TOP. FONT HILL PEAR LAMINATE FINISH. INSTALLED BY G.C.
32	BACK COUNTER	DUKE MANUFACTURING	DAI	1	( )24" ( )36" ( )48" ( )60" (✓)72" LENGTH. STAINLESS STEEL TOP. FONT HILL PEAR LAMINATE FINISH. INSTALLED BY G.C.
33	REFRIGERATED BACK COUNTER	DUKE MANUFACTURING	DAI	1	(✓)48" LENGTH. ( )60" LENGTH. BACK COUNTER WITH UNDER-COUNTER REFRIGERATOR. STAINLESS STEEL TOP. FONT HILL PEAR LAMINATE FINISH. INSTALLED BY G.C.
34	RAPID COOK OVEN	TURBOCHEF/MERRYCHEF	DAI	1	(✓)TURBOCHEF ( )MERRYCHEF MICROWAVE/CONVECTION OVEN. REFER TO TUSCANY II BACK-UP SHEET #4 FOR FURTHER SPECIFICATIONS.
					BACKROOM AREA
36	SINK	DUKE MANUFACTURING	DAI	1	(3)COMPARTMENT(S) (2)DRAINBOARD(S). (✓)18" ( )24" DRAINBOARD SIZE. INSTALLED BY G.C. ULS APPROVED.
37	MOP SINK	LOCALLY SOURCED	G.C.	1	FLOOR LEVEL SINK. 2' X 2' (PREFERRED). ACQUIRE LOCALLY. INSTALLED BY G.C.
38	HOT WATER TANK	LOCALLY SOURCED	G.C.	1	ACQUIRE LOCALLY. INSTALLED BY G.C.
39	S.S. WORKTABLE	DUKE MANUFACTURING	DAI	1	( )24" ( )36" ( )48" ( )60"(✓)72" ( )84" ( )96" ( )108" ( )120" X 30"(✓)( )W/ GALVANIZED UNDERSHELF ( )WITHOUT UNDERSHELF.
40	WALL SHELF	INTER METRO	DAI	2	SUPER ERECTA BRITE. EPOXY COATED. WALL MOUNTED SHELVES, AVAILABLE IN VARIOUS SIZES. INSTALLED BY G.C.
41	VEGETABLE SINK	DUKE MANUFACTURING	DAI	1	(1)COMPARTMENT(S) (1)DRAINBOARD(S). (✓)18" ( )24" DRAINBOARD SIZE. INSTALLED BY G.C. ULS APPROVED.
42	HAND SINK	DUKE MANUFACTURING / LOCAL	DAI/G.C.	1	WALL MOUNTED, 10" X 14" X 6", OR SEE OWNER FOR SPECS. SUBJECT TO HEALTH CODE APPROVAL. PROVIDE WALL MOUNTED SINGLE SERVICE TOWEL AND SOAP DISPENSER
43	CLEANING PRODUCT RACK	SSDC	DAI	1	DISPENSING STATION FOR CLEANING PRODUCTS.
45	NEMCO EASY-SLICER	NEMCO, INC.	DAI	1	MANUAL SLICER MOUNTED ON STAINLESS STEEL TABLE TOP. NSF APPROVED.
46	RETARDER CABINET	LOCKWOOD	DAI	1	(✓)WALK-IN ( )REACH-IN . NSF APPROVED.
47	REFRIGERATOR	NORLAKE	DAI	1	( )8' X 6' ( )6' X 8'(✓)6' X 6' ( )5' X 6' ( )4' X 6' ( )3 DOOR ( )2 DOOR ( )1 DOOR ( )OTHER__X__ SELF-EVAPORATING. DIRECT WIRED. INSTALLED BY G.C. NSF APPROVED.
48	FREEZER	NORLAKE	DAI	1	( )8' X 6' ( )6' X 8'(✓)6' X 6' ( )5' X 6' ( )4' X 6' ( )3 DOOR ( )2 DOOR ( )1 DOOR ( )OTHER__X__ SELF-EVAPORATING. DIRECT WIRED. INSTALLED BY G.C. NSF APPROVED.
49	STORAGE UNITS	INTER METRO	DAI	6	( )14" X 48" (1)18" X 60" ( )18" X 60" ( )21" X 48" ( )24" X 48" (3)24" X 60" (2)24" X 72". SUPER ERECTA BRITE. EACH SHELVING UNIT HAS 5 TIERS
50	SODA STORAGE	COKE	DAI	1	DEDICATED 115V, 20 AMP DUPLEX OUTLET (NEMA 5-20R) W/IN 3 FEET OF BIB RACK, 96 INCHES HIGH/WATER 1/2 INCH BALL VALVE SHUTOFF W/IN 3 FEET OF BIB RACK, 96 INCHES HIGH (EQUIPMENT INSTALLED BY COKE).
51	STERED SYSTEM	SUBWAY® RADIO/LOCAL	DAI/LOCAL	1	RECEIVER AND AMPLIFIER WITH THREE SPEAKERS MOUNTED AND PROFESSIONALLY WIRED IN CEILING. OPTIONAL SUBWAY® RADIO SERVICE.

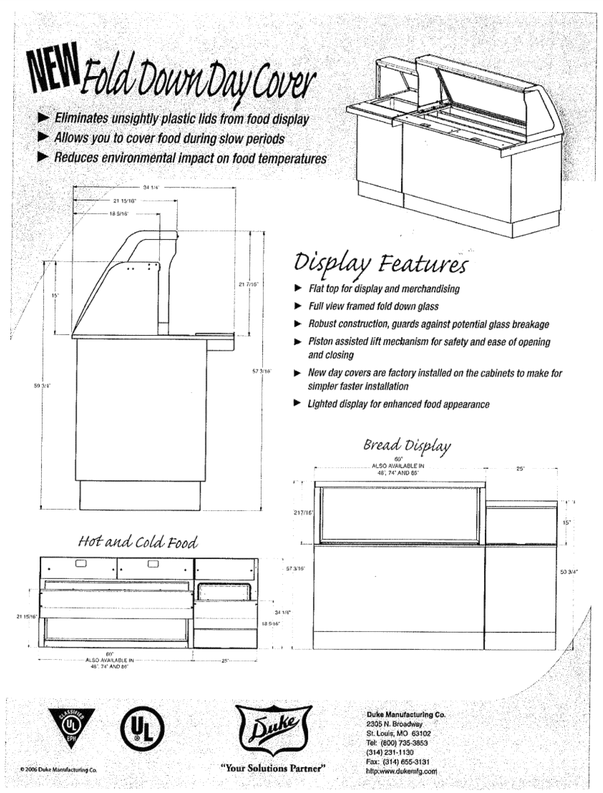

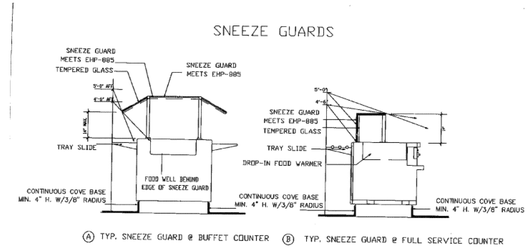

NOTE: THE SNEEZE GUARD EXAMPLES ILLUSTRATE ONLY ONE OF THE MANY WAYS TO CONSTRUCT SNEEZE GUARDS. REGARDLESS, IT IS THE RESPONSIBILITY OF THE FOOD OPERATOR TO CONSTRUCT THESE GUARDS THAT WILL PROTECT AND DISPLAY FOODS OR FOODS BEING PREPARED FROM ABOVE AND ALL SIDES WHERE FOODS ARE EXPOSED TO AIRBORNE PARTICULATES.

NOTES:

EACH SHELVING UNIT HAS FIVE TIERS TO TOTAL 160 LINEAR FEET OF SHELVING.

EACH HAND SINK (#31 and #42) SHALL HAVE A WALL MOUNTED SINGLE SREVICE TOWEL AND SOAP DISPENSER

SPLASHGUARDS (MINIMUM OF 6 INCHES HIGH) WILL BE REQUIRED WHEN THE HAND SINK IS LOCATED IN A COUNTER, NEAR WORKTABLES OR DRAIN BOARDS.

A WASHABLE PARTITION AT LEAST SIX FEET HIGH, AS MEASURED FROM THE FLOOR, SHALL BE INSTALLED BETWEEN THE JANITORIAL FACILITIES AND THE SODA STORAGE AND 3-COMPARTMENT SINK.

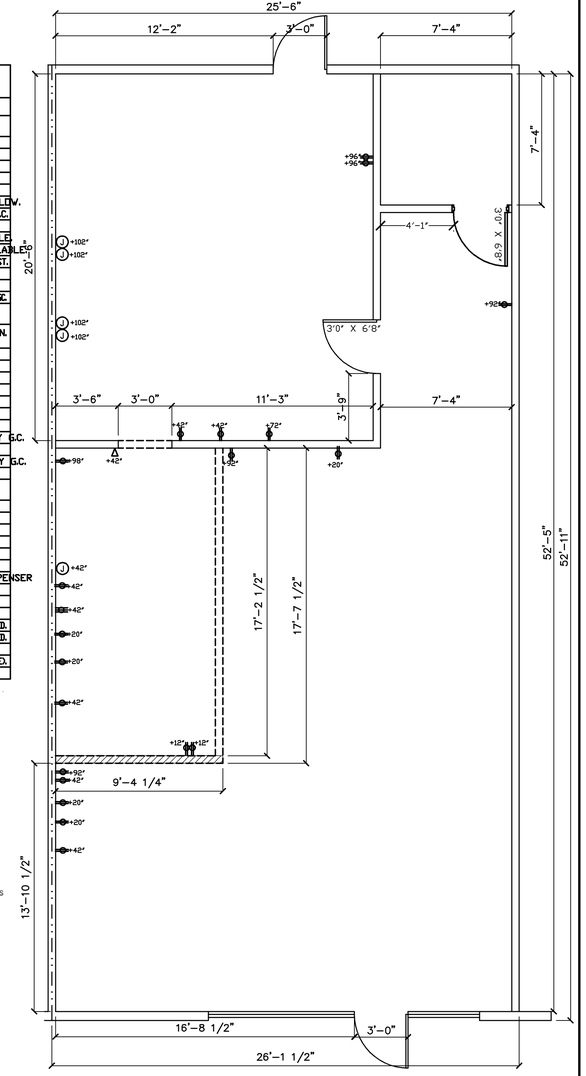

2 ELECTRIC & DIMENSION PLAN

SCALE: 1/4" = 1'

SYMBOL LEGEND

- PHONE JACK
- 120V DUPLEX OUTLET
- 220V SINGLE OUTLET
- (J) JUNCTION BOX

GENERAL NOTES:

- CEILING HEIGHT IS 9'
- ELECTRICAL OUTLET HEIGHTS MEASURED TO BOTTOM OF BOX.
- ONE ELECTRICAL JUNCTION BOX TO BE LOCATED IN CEILING ABOVE EACH WINDOW.
- CUNO MODEL SW3-PLUS WATER FILTRATION SYSTEM IS REQUIRED IN ALL NEW STORES THAT DISPENSE BEVERAGES. THE RECOMMENDED PLACEMENT FOR INSTALLATION IS MOUNTED TO SODA SYRUP RACK BY COCA-COLA. SECONDARY PLACEMENT OPTION IS MOUNTED ON THE BACKROOM WALL. THIRD INSTALLATION OPTION IS MOUNTING INSIDE THE FRONT BEVERAGE COUNTER WHEN SPACE LIMITATIONS OCCUR. REQUIRED 1/2" INCOMING WATER LINE FEED WITH 1/2" BALL VALVE SHUTOFF AND 1/2" FPT CONNECTION. MINIMUM 110 VOLT, 20 AMP ELECTRICAL SERVICE TO SUPPORT THE CARBONATOR AND WATER BOOSTER (MUST BE DEDICATED CIRCUIT).
- SMARTCURVE STAND (MFR. DISPLAY-BOX) REQUIRED IN CUSTOMER AREA AT POINT OF ORDER (PREFERRED PLACEMENT). 21 3/4" X 13 1/8" BASE, 56" (WITHOUT HEADER) OVERALL HEIGHT.
- SECONDARY CHIP RACK IS REQUIRED IN THE CUSTOMER AREA. THE TWO AVAILABLE OPTIONS ARE: BASKET STYLE CHIP RACK AT THE POINT OF ORDER (PREFERRED PLACEMENT) OR PURSE RAIL MOUNTED CHIP RACK (MOUNTED ON TOP OF THE PURSE RAIL.)
- EXIT LIGHTS INSTALLED BY G.C. PER LOCAL CODE.
- EMERGENCY LIGHTS INSTALLED BY G.C. PER LOCAL CODE.
- EXTINGUISHERS, SMOKE AND FIRE DETECTION SYSTEMS INSTALLED BY G.C. PER LOCAL CODE.
- LABOR & MATERIAL SUPPLIED BY G.C. UNLESS OTHERWISE NOTED.
- ALL DIMENSIONS TO BE VERIFIED BY G.C. ON SITE.
- DECOR SPECIFICATIONS ARE TO BE SUBWAY'S "TUSCANY II" SCHEME.

REVISION:	BY	DATE

STORE MUST BE CONSTRUCTED AS DESIGNED IN THESE FLOOR PLANS SUBJECT TO FEDERAL, STATE AND LOCAL LAWS. RECIPIENT IS RESPONSIBLE FOR ENSURING COMPLIANCE WITH ALL LAWS. IF MODIFICATIONS ARE NECESSARY, PLEASE CONTACT DA'S STORE DESIGN DEPARTMENT FOR WRITTEN APPROVAL OF THE REQUIRED CHANGES.

THIS DRAWING IS FURNISHED BY DOCTORS ASSOCIATES INC. ("DA") D/B/A SUBWAY. RECIPIENT MUST DETERMINE IF THIS DRAWING MUST BE SUBMITTED TO A LICENSED ARCHITECT OR SIMILAR PROFESSIONAL UNDER FEDERAL, STATE OR LOCAL LAW. ANY CHANGES MUST BE APPROVED BY DAI.

DO NOT SCALE DRAWING. WRITTEN DIMENSIONS TAKE PRECEDENCE OVER SCALED DIMENSIONS, AND SHALL BE VERIFIED IN THE FIELD BY THE GENERAL CONTRACTOR AND/OR FRANCHISEE/OWNER. ANY DISCREPANCY IN DIMENSIONS SHALL BE BROUGHT TO THE IMMEDIATE ATTENTION OF DA'S AREA DEVELOPMENT AGENT OR DESIGNATED FIELD REPRESENTATIVE.

THE GENERAL CONTRACTOR AND EACH SUB-CONTRACTOR SHALL MAKE HIS OWN INSPECTIONS AND MEASUREMENTS. DAI AND SUBWAY SHALL NOT BE HELD RESPONSIBLE FOR THE ACCURACY OF DIMENSIONS AND FOR ERRORS AND OMISSIONS IN THE DRAWINGS IF WRITTEN CONFIRMATION HAS NOT BEEN RECEIVED BY DA'S STORE DESIGN DEPARTMENT.

THIS DRAWING AND THE INFORMATIONAL CONTENT HERE OF IS THE CONFIDENTIAL PROPERTY DAI OF AND IS PROVIDED SOLELY FOR THE USE OF AUTHORIZED FRANCHISEES, THEIR AGENTS AND CONTRACTORS. RECIPIENT AGREES NOT TO REPRODUCE, COPY, USE OR TRANSMIT THIS DRAWING AND/OR ITS INFORMATIONAL CONTENT, IN WHOLE OR IN PART, OR TO ALLOW SUCH ACTION BY OTHERS, FOR ANY PURPOSE, EXCEPT WITH THE WRITTEN PERMISSION OF DAI ACTING FOR SUBWAY. RECIPIENT FURTHER AGREES TO SURRENDER THIS DRAWING AND ANY PERMITTED COPIES HEREOF UPON DEMAND.

SUBWAY®
WORLD HEADQUARTERS
325 BIC DRIVE
MILFORD, CT 06461
(203) 877-4281
(800) 888-4848

LOCATION:
SUITE B
8960 FLETCHER PKWY
LA MESA, CA 91942

FRANCHISEE: MARWAHA

DEVELOPMENT AGENT: MARWAHA

DATE: JULY 8, 2010

DESIGNED BY: DAVE MILLER

DRAWN BY: D.G.M.

REVIEWED BY:

SCALE: 1/4" = 1'-0"

SHEET #: 1 OF 2

PRINTED: 10/8/2010

©2008 DOCTORS ASSOCIATES, INC.