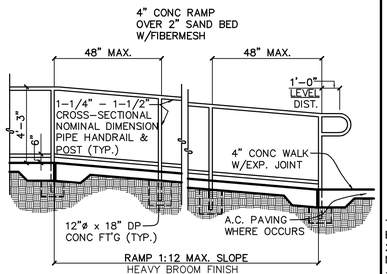


D1560

## 25 RAMP DETAIL 3/8"

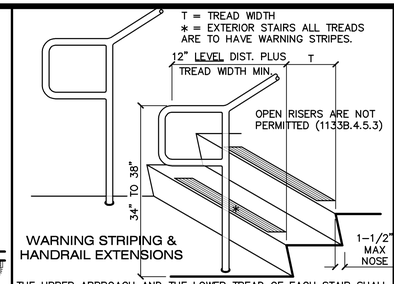


THE UPPER APPROACH AND THE LOWER TREAD OF EACH STAIR SHALL BE MARKED BY A STRIP OF CLEARLY CONTRASTING COLOR AT LEAST 2" WIDE AND NOT MORE THAN 4" WIDE PLACED PARALLEL TO AND NOT MORE THAN 1" FROM THE NOSE OF THE STEP OR LANDING.

THE STRIP MUST BE MADE OF A MATERIAL THAT IS AT LEAST AS SLIP RESISTANT AS THE OTHER TREADS OF THE STAIR. (PAINTED STRIPS ARE ACCEPTABLE)

D1428

## 23 STAIRS (BOTTOM OF RUN) 3/4"

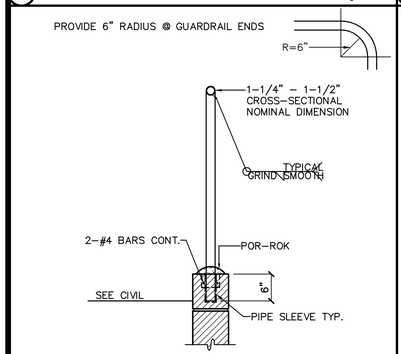


"A" GUARDRAIL DETAIL (± 85'-0")

D1321

## 26 GUARDRAIL DETAIL 3/4"

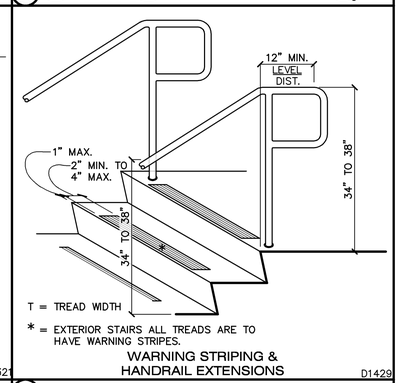


D1429

## 24 STAIRS (TOP OF RUN) 3/4"

## DOORS:

1.) EXIT DOORS SHALL BE OPENABLE FROM THE INSIDE WITHOUT THE USE OF A KEY OR OTHER SPECIAL KNOWLEDGE OR EFFORT.

2.) EVERY REQUIRED EXIT DOORWAY SHALL BE OF A SIZE AS TO PERMIT THE INSTALLATION OF A DOOR NOT LESS THAN 36" IN WIDTH AND NOT LESS THAN 6'-8" IN HEIGHT. WHEN INSTALLATION IN EXIT DOORWAYS, EXIT DOORS SHALL BE CAPABLE OF OPENING AT LEAST 90 DEGREES AND SHALL BE SO MOUNTED THAT THE CLEAR WIDTH OF THE EXIT IS NOT LESS THAN 32". IN COMPUTING THE EXIT WIDTH REQUIRED BY SUBSECTION 3303(b), THE NET DIMENSION OF THE EXIT SHALL BE USED.

3.) FOR HINGED DOORS, THE OPENING WIDTH SHALL BE MEASURED WITH THE DOOR POSITIONED AT AN ANGLE OF 90 DEGREES FROM ITS CLOSED POSITION.

4.) WHERE A PAIR OF DOORS IS UTILIZED AT LEAST ONE OF THE DOORS SHALL PROVIDE A CLEAR UNOBSTRUCTED OPENING WIDTH OF 32" WITH THE LEAF POSITIONED AT AN ANGLE OF 90 DEGREES FROM ITS CLOSED POSITION.

5.) WHEN AN AUTOMATIC DOOR OPERATOR IS UTILIZED TO OPERATE A PAIR OF DOORS, AT LEAST ONE OF THE DOORS SHALL PROVIDE A CLEAR UNOBSTRUCTED OPENING WIDTH OF 32" WITH THE DOOR POSITIONED AT AN ANGLE OF 90 DEGREES FROM ITS CLOSED POSITION.

6.) REVOLVING DOORS SHALL NOT BE USED AS A REQUIRED ENTRANCE FOR THE PHYSICALLY HANDICAPPED/PEOPLE WITH PHYSICAL DISABILITIES.

## TURNSTILES:

WHERE TURNSTILES ARE UTILIZED IN FACILITY FOR THE PURPOSE OF PROVIDING FULLY CONTROLLED ACCESS, SUCH AS WHERE AN ADMISSION PRICE IS CHARGED, A DOOR OF GATE THAT IS ACCESSIBLE TO THE PHYSICALLY HANDICAPPED/PEOPLE WITH PHYSICAL DISABILITIES SHALL BE PROVIDED ADJACENT TO OR WITHIN A DISTANCE NOT TO EXCEED 30' FROM EACH TURNSTILE EXIT OR ENTRANCE. THIS ALTERNATE PASSAGEWAY SHALL BE MAINTAINED IN AN UNLOCKED CONDITION DURING BUSINESS HOURS AND THE DOOR OR GATE SHALL NOT ACTIVATE A PUBLICLY AUDIBLE ALARM SYSTEM. WHERE POSTS, RAILS OR OTHER PEDESTRIAN CONTROLS ARE UTILIZED, THEY SHALL PROVIDE 32" OF CLEAR OPENING.

## THRESHOLDS AND CLEARANCE:

1.) THE FLOOR OR LANDING SHALL BE NOT MORE THAN 1/2" LOWER THAN THE THRESHOLD OF THE DOORWAY. RAISED THRESHOLDS AND FLOOR LEVEL CHANGES GREATER THAN 1/4" @ DOORWAYS SHALL BE BEVELED WITH A SLOPE NOT GREATER THAN ONE UNIT VERTICAL IN TWO UNITS HORIZ.

2.) THE FLOOR OR LANDING ON EACH SIDE OF AN EXIT DOOR SHALL BE LEVEL AND CLEAR. (SEE DETAIL 18/HC-2)

## DISABLED ACCESS REQUIREMENTS

HAND ACTIVATED DOOR OPENING HARDWARE, HANDLES, PULLS, LATCHES, LOCKS AND OTHER OPERATING DEVICES ON ACCESSIBLE DOORS SHALL HAVE A SHAPE THAT IS EASY TO GRASP WITH ONE HAND AND DOES NOT REQUIRE TIGHT GRASPING, TIGHT PINCHING, OR TWISTING OF THE WRIST TO OPERATE. HARDWARE SHALL BE CENTERED BETWEEN 30" & 44" ABV THE FLOOR. LATCHING AND LOCKING DOORS THAT ARE HAND ACTIVATED AND WICH ARE IN THE PATH OF TRAVEL SHAL BE OPERABLE WITH A SINGLE EFFORT BY LEVER-TYPE HARDWARE, PANIC BARS, PUSH PULL ACTIVATING BARS OR OTHER HARDWARE DESIGNED TO PROVIDE PASSAGE. LOCKED EXIT DOORS SHALL OPERATE AS ABV IN EGRESS DIRECTION.

## HARDWARE AND CONSTRUCTION:

MAXIMUM EFFORT TO OPERATE DOORS SHALL NOT EXCEED 5 POUNDS FOR EXTERIOR DOORS AND 5 POUNDS FOR INTERIOR DOORS, SUCH PULL OR PUSH EFFORT BEING APPLIED AT RIGHT ANGLES TO HINGED DOORS AND AT THE CENTER PLANE OF SLIDING OF FOLDING DOORS. COMPENSATION DEVICES OR AUTOMATIC DOOR OPERATORS MAY BE UTILIZED TO MEET ABOVE STANDARDS. WHEN FIRE DOORS ARE REQUIRED, THE MINIMUM EFFORT TO OPERATE THE DOOR MAY BE INCREASED NOT TO EXCEED 15 POUNDS.

THE BOTTOM 10" OF ALL DOORS EXCEPT AUTOMATIC AND SLIDING SHALL HAVE A SMOOTH UNINTERRUPTED SURFACE TO ALLOW THE DOOR TO BE OPENED BY A WHEELCHAIR FOOTREST WITHOUT CREATING A TRAP OR HAZARDOUS CONDITION. WHERE NARROW FRAME DOORS ARE USED, A 10" HIGH SMOOTH PANEL SHALL BE INSTALLED ON THE PUSH SIDE OF THE DOOR, WHICH WILL ALLOW THE DOOR TO BE OPENED BY A WHEELCHAIR FOOTREST WITHOUT CREATING A TRAP OR HAZARDOUS CONDITION.

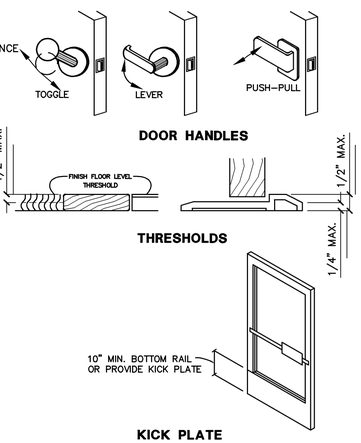


D1236

## 21 DOOR CONSTRUCTION, THRESHOLD, HARDWARE & CLOSERS

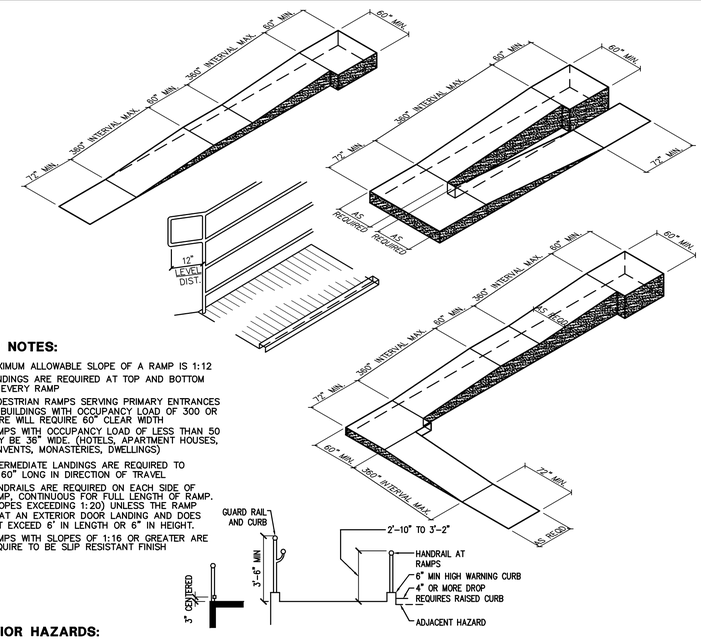


## RAMP NOTES:

1.) MAXIMUM ALLOWABLE SLOPE OF A RAMP IS 1:12
2.) LANDINGS ARE REQUIRED AT TOP AND BOTTOM OF EVERY RAMP
3.) PEDESTRIAN RAMPS SERVING PRIMARY ENTRANCES TO BUILDINGS WITH OCCUPANCY LOAD OF 300 OR MORE WILL REQUIRE 60" CLEAR WIDTH
4.) RAMPS WITH OCCUPANCY LOAD OF LESS THAN 50 MAY BE 36" WIDE. (HOTELS, APARTMENT HOUSES, CONVENTS, MONASTERIES, DWELLINGS)
5.) INTERMEDIATE LANDINGS ARE REQUIRED TO BE 60" LONG IN DIRECTION OF TRAVEL
6.) HANDRAILS ARE REQUIRED ON EACH SIDE OF RAMP. CONTINUOUS FOR FULL LENGTH OF RAMP. (SLOPES EXCEEDING 1:20) UNLESS THE RAMP IS AT AN EXTERIOR DOOR LANDING AND DOES NOT EXCEED 6' IN LENGTH OR 6" IN HEIGHT.
7.) RAMPS WITH SLOPES OF 1:16 OR GREATER ARE REQUIRE TO BE SLIP RESISTANT FINISH

## EXTERIOR HAZARDS:

1. WARNING CURBS: ABRUPT CHANGES IN LEVEL, EXCEPT BETWEEN A WALK OR SIDEWALK AND ADJACENT STREET OR DRIVEWAYS, EXCEEDING 4 INCHES IN A VERTICAL DIMENSION, SUCH AS AT PLANTERS OR FOUNTAINS LOCATED IN OR ADJACENT TO WALKS, SIDEWALKS, OR OTHER PEDSTRIAN WAYS, SHALL BE IDENTIFIED BY CURBS PROJECTING AT LEAST 6 INCHES IN HEIGHT ABOVE THE WALK OR SIDEWALK SURFACE TO WARN THE BLIND OF A POTENTIAL DROP OFF. WHEN A GUARDRAIL OR HANDRAIL IS PROVIDED, NO CURB IS REQUIRED WHEN A GUIDE RAIL IS PROVIDED CENTERED 3 INCHES PLUS OR MINUS ONE INCH ABOVE THE SURFACE OF THE WALK OR SIDEWALK, THE WALK IS 5 PRECENT OR LESS GRADIENT OR NO ADJACENT HAZARDS EXIST. 1133B.8.1

D1237

## 22 RAMPS

1. DRINKING FOUNTAINS ARE TO BE LOCATED WITHIN ALCOVES OR POSITIONED SO AS NOT TO BE IN CORRIDOR OR WALK
2. WHEN ENFORCING AGENCY ALLOWS AN UNREASONABLE HARDSHIP, FOUNTAINS MAY BE LOCATED IN PATH OF TRAVEL AND THE PATH OF TRAVEL SHALL BE INDENTIFIABLE TO THE BLIND AS FOLLOWS.
   A. THE SURFACE OF THE PATH OF TRAVEL AT THE WATER FOUNTAIN SHALL BE TEXTURED SO THAT IT IS CLEARLY IDENTIFIABLE BY A BLIND PERSON USING A CANE. THE MINIMUM TEXTURED AREA SHALL EXTEND FROM THE WALL SUPPORTING THE WATER FOUNTAIN TO (1) ONE FOOT BEYOND THE FRONT EDGE OF THE WATER FOUNTAIN AND SHALL EXTEND (1) ONE FOOT BEYOND EACH SIDE OF THE WATER FOUNTAIN, OR
   B. WING WALLS SHALL BE PROVIDED ON EACH SIDE OF THE WATER FOUNTAIN. THE WING WALLS SHALL PROJECT OUT FROM THE SUPPORTING WALL AT LEAST AS FAR AS THE FOUNTAIN TO WITHIN 6-INCHES OF THE SURFACE OF THE PATH OF TRAVEL. ALSO, THERE SHALL BE A MINIMUM OF 32 INCHES CLEAR BETWEEN THE WING WALLS.
3. ALCOVES SHALL BE 32" MIN. WIDE BY 18" MIN. TO 24" MAX. DEEP
4. FOUNATAINS SHALL BE 18" MIN. TO 19" MAX. DEPTH
5. KNEE SPACE 27" MIN. HEIGHT TO 8" DEEP FROM FRONT EDGE OF FOUNTAIN
6. TOE SPACE 9" MIN. HEIGHT TO 6" MAX. FROM SUPPORTING WALL
7. SPOUT (BUBBLER) LOCATION SHALL BE LOCATED WITHIN 6" OF THE FRONT OF THE FOUNTAIN, WATER STREAM SHALL BE A MIN. 4" HIGH ON AN ACCESSIBLE DRINKING FOUNTAIN WITH A ROUND OR OVAL BOWL, THE SPOUT MUST BE POSITIONED SO THE FLOW OF WATER IS WITHIN 3" OF THE FRONT EDGE OF THE FOUNTAIN.
8. SPOUT (BUBBLER) HEIGHT SHALL BE NO HIGHER THAN 36", MEASURED FROM THE FLOOR OR GROUND SURFACES TO THE SPOUT OUTLET.
9. CONTROLS SHALL BE FRONT MOUNTED OR SIDE MOUNTED WITHIN 6" OF THE FRONT EDGE
10. CONTROL OPERATION MECHANISMS SHALL BE OPERABLE WITH ONE HAND AND SHALL NOT REQUIRE TIGHT GRASPING, PINCHING, OR TWISTING OF THE WRIST. THE FORCE REQUIRED TO ACTIVATE SHALL BE NO GREATER THAN 5lbf.

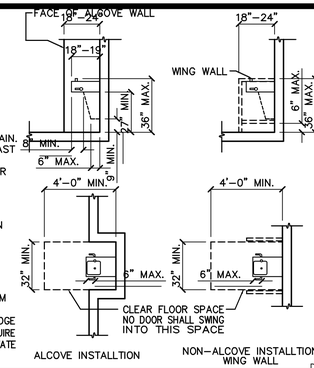


D1336

## 17 DRINKING FOUNTAINS AND WATER COOLERS 1/4"

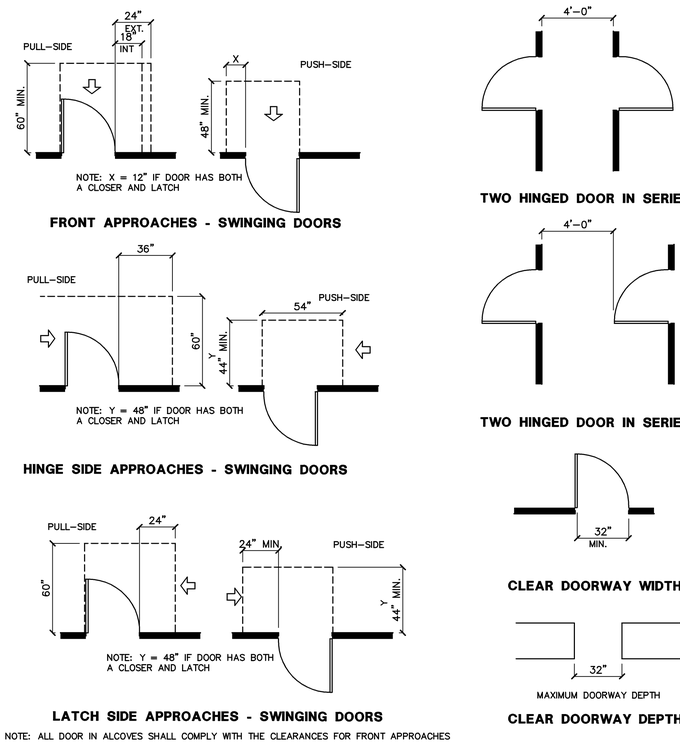


NOTE: ALL DOOR IN ALCOVES SHALL COMPLY WITH THE CLEARANCES FOR FRONT APPROACHES

D1234

## 18 MANEUVERING CLEARANCES AT DOORS

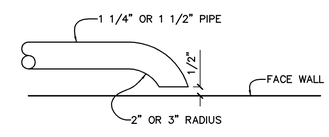


D1432

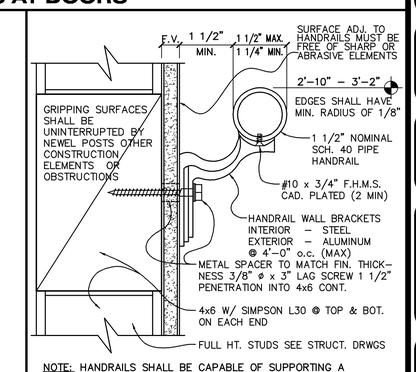


NOTE: HANDRAILS SHALL BE CAPABLE OF SUPPORTING A 200 lb. LOAD @ ANY POINT & IN ANY DIRECTION

D1377

## 20 HANDRAIL TURN IN @ END 3"

## 19 HANDRAIL ANCHORAGE 6" 2"


Pasquini Engineering
Marc A. Pasquini Civil Engineer
903 "H" Street, Suite 300
Bakersfield, CA. 93304
Telephone: (661) 328-9600
Fax: (661) 328-9030


| DATE | ISSUED |
|---|---|
| | |

| DATE | MARK | ISSUED |
|---|---|---|
| | | |

| | |
|---|---|
| DWG. BY | |
| CHK'D BY | |
| DATE | 4/28/09 |
| JOB NO. | |
| FILE NO. | HC-2 |

EXP. 12/31/10

SHEET HC-2 SHEET

PRINTED: 10/8/2010