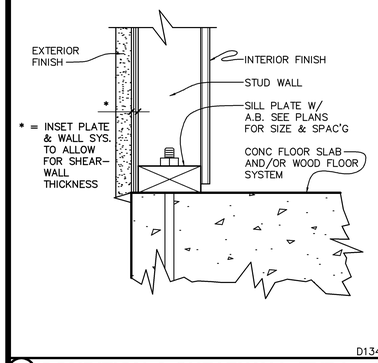

1 CONDITION @ SHEARWALL (TYP.) 3"

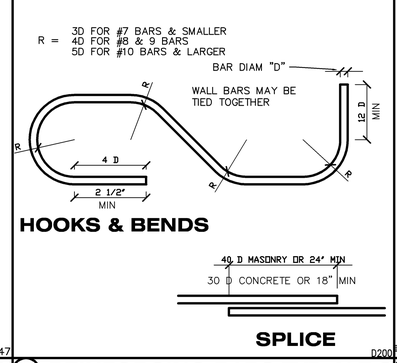

5 REINFORCING BARS TYP. N.T.S

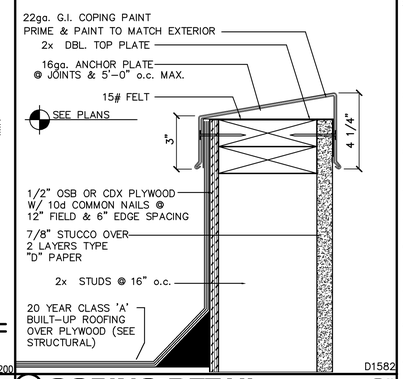

9 COPING DETAIL 3"

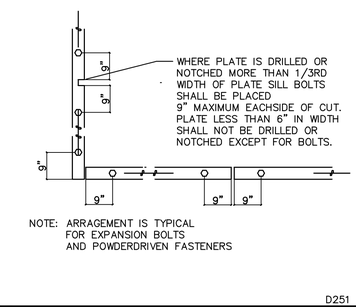

2 TYP. A.B. LAYOUT PLAN 1/2"

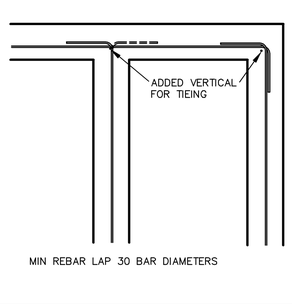

6 REINFORCING BAR SPLICE 1/2"

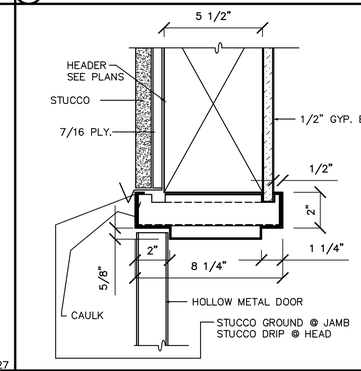

10 HOLLOW MTL. DR. HEAD 3"

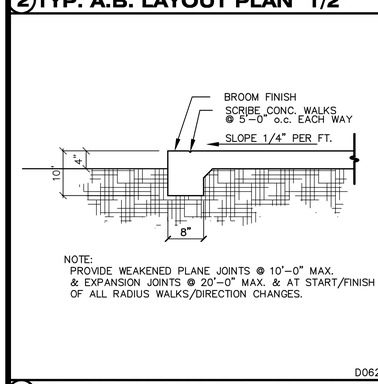

3 PATIO & WALK FOOTING 3/4"

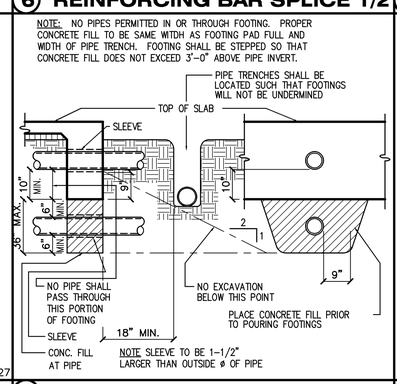

7 PIPE & TRENCH LOCATION 1/2"

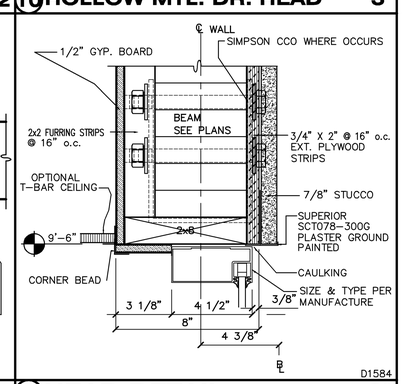

11 HEAD DETAIL 3"

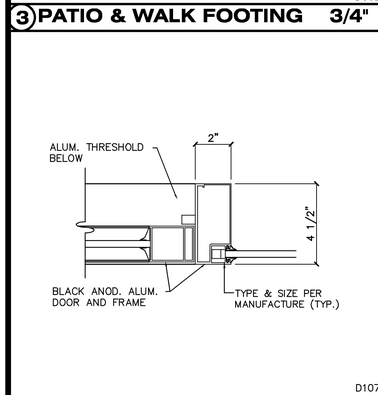

4 DOOR JAMB DETAIL 3"

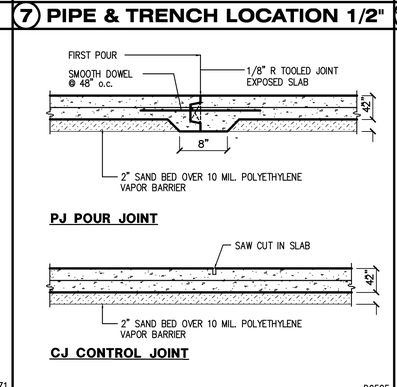

8 POUR/CONTROL JOINT 1"

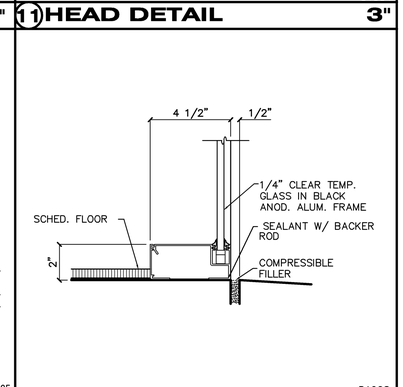

12 WINDOW SILL DETAIL 3"

SCOPE OF STRUCTURAL NOTES:

1. ALL WORK AND MATERIALS SHALL BE IN FULL ACCORDANCE WITH THE RULES AND REGULATIONS OF THE CALIFORNIA BUILDING CODE, 2007 EDITION, AND ALL LOCAL CODES AND ORDINANCES. NOTHING IN THESE PLANS IS TO BE CONSTRUED TO PERMIT WORK NOT CONFORMING TO THESE CODES.

2. IT SHALL BE THE CONTRACTORS RESPONSIBILITY TO ENSURE THAT DETAILS REQUIRED BY THE VARIOUS CODES, BUT NOT SPECIFICALLY NOTED IN THESE PLANS ARE COMPLETED ACCORDING TO THE CODES.

3. ALL WORK SHALL BE FIRST CLASS WORKMANSHIP. THE CONTRACTOR SHALL BE RESPONSIBLE FOR THE INTENT OF THESE DRAWINGS.

4. ALL WRITTEN DIMENSIONS SHALL TAKE PRECEDENCE OVER SCALE OF DRAWINGS.

5. NOTES AND WORKING DRAWINGS SHALL TAKE PRECEDENCE OVER THE GENERAL NOTES.

6. THE CONTRACTOR SHALL VERIFY ALL DIMENSIONS AT THE JOB SITE, AND ON THE PLANS PRIOR TO CONSTRUCTION, AND SHALL NOTIFY THE ENGINEER IN WRITING OF ANY DISCREPANCIES.

7. ANY CHANGES TO THESE PLANS SHALL BE VERIFIED IN WRITING BY THE ENGINEER PRIOR TO CONSTRUCTION.

8. NO CUTTING OR DRILLING OF STRUCTURAL MEMBERS SHALL BE PERMITTED WITHOUT WRITTEN PERMISSION OF THE ENGINEER.

9. IN THE EVENT THAT ANY FURTHER DATA, INFORMATION OR CLARIFICATION OF THESE PLANS IS REQUIRED, IT IS THE RESPONSIBILITY OF THE GENERAL CONTRACTOR TO MAKE A VERBAL AND WRITTEN REQUEST TO THE ENGINEER AT THAT TIME PRIOR TO CONSTRUCTION OF ANY DISCREPANCIES FOUND WITHIN THIS SET OF PLANS.

10. NOTES AND DETAILS ON DRAWINGS SHALL TAKE PRECEDENCE OVER THESE GENERAL NOTES.

11. THE TYPICAL DETAILS SHOWN ON THIS SHEET SHALL APPLY IN ALL CASES UNLESS SPECIFICALLY SHOWN OTHERWISE. WHERE NO DETAIL IS SHOWN, CONSTRUCTION SHALL BE AS SHOWN FOR OTHER SIMILAR WORK.

12. IT IS THE INTENTION OF THESE DRAWINGS TO PROVIDE FOR THE FOLLOWING CONTINUITIES:

1. ALL ROOF STRUTS SHALL BE CONTINUOUSLY CONNECTED FOR THE FULL LENGTH OF THE ROOF SYSTEM.

2. ALL WALL BRACING SHALL BE CONNECTED TO THE ROOF.

13. DESIGN LOADS: DEAD

ROOF:
B.U. ROOF
5/8" OSB
TRUSSES @ 32" O.C.
CEIL'G + MISC
FIRE SPRINKLERS

DESIGN ROOF TRUSSES FOR

14. DESIGN LOADS: LIVE

A = AREA IN SQUARE FEET.

ROOF:

15. SEISMIC CRITERIA

16. CHARACTER OF FOUNDATION SOIL: SEE SOILS REPORT.

17. DESIGN SOIL PRESSURE: SEE SOILS REPORT.

18. THE CONTRACT DRAWINGS AND SPECIFICATIONS REPRESENT THE FINISHED STRUCTURE. UNLESS OTHERWISE SHOWN, THEY DO NOT INDICATE THE METHOD OF CONSTRUCTION. THE CONTRACTOR SHALL SUPERVISE AND DIRECT THE WORK AND SHALL BE SOLELY RESPONSIBLE FOR ALL CONSTRUCTION MEANS, METHODS, TECHNIQUES, SEQUENCES AND PROCEDURES IN ACCORDANCE WITH GENERALLY ACCEPTED CONSTRUCTION PRACTICES. THE CONTRACTOR WILL BE SOLELY AND COMPLETELY RESPONSIBLE FOR CONDITIONS OF THE JOB SITE, INCLUDING SAFETY OF ALL PERSONS AND PROPERTY DURING PERFORMANCE OF THE WORK. THIS REQUIREMENT WILL APPLY CONTINUOUSLY AND NOT BE LIMITED TO NORMAL WORKING HOURS.

THE ENGINEER WILL NOT CONDUCT CONSTRUCTION REVIEW UNLESS HIRED TO DO SO BY THE OWNER/CONTRACTOR. THE ENGINEER IS ONLY RESPONSIBLE FOR THE ITEMS ADDRESSED IN WRITING, AND IS NOT RESPONSIBLE FOR ANY ITEMS EITHER UNSEEN OR UNNOTICED BY THE ENGINEER

THE DUTY OF THE ENGINEER TO CONDUCT CONSTRUCTION REVIEW OF THE CONTRACTOR'S PERFORMANCE IS NOT INTENDED TO INCLUDE REVIEW OF THE ADEQUACY OF THE CONTRACTOR'S SAFETY MEASURES IN, ON, OR NEAR THE CONSTRUCTION SITE.

ANY SUPPORT SERVICES PERFORMED BY THE ENGINEERS FIELD REPRESENTATIVES DURING CONSTRUCTION SHALL BE DISTINGUISHED FROM CONTINUOUS AND DETAILED INSPECTION SERVICES WHICH ARE FURNISHED BY OTHERS. THESE SUPPORT SERVICES PERFORMED BY THE ENGINEER, WHETHER OF MATERIAL OR WORK, AND WHETHER PERFORMED PRIOR TO, DURING OR FOR THE PURPOSE OF ASSISTING IN QUALITY CONTROL AND IN ACHIEVING CONFORMANCE WITH CONTRACT DRAWINGS AND SPECIFICATIONS, BUT THEY DO NOT GUARANTEE CONTRACTOR'S PERFORMANCE AND SHALL NOT BE CONSTRUED AS SUPERVISION OF CONSTRUCTION.

ALL WORK SHALL CONFORM TO THE LATEST APPLICABLE CONSTRUCTION SAFETY REQUIREMENTS OF OSHA AND ANY OTHER GOVERNMENTAL ENTITY HAVING JURISDICTION.

SOILS:

1. EARTHWORK PREPARATION TO CONFORM TO SOILS ENGINEERS RECOMMENDATIONS IN REPORT & ALL PERTINENT CODES.

CONCRETE NOTES:

1. UNLESS OTHERWISE NOTED, f'c = 3,000 PSI IN 28 DAYS FOR SLABS, FOOTINGS AND WALLS. USE 3/4" PUMP MIX.

2. ALL CONCRETE SHALL BE REINFORCED. ALL REINFORCING STEEL SHALL BE PROTECTED FROM CONTACT WITH EARTH BY:
A. THREE INCHES MIN. CONCRETE SEPARATION WHERE CONCRETE IS POURED AGAINST THE EARTH.
B. TWO INCHES MIN. CONCRETE SEPARATION WHERE CONCRETE IS EXPOSED TO EARTH BUT PLACED IN FORMS.

3. FORMS ARE TO BE TIGHT ENOUGH TO PREVENT LEAKING OF CONCRETE OR BULGING OF FORM. FORMS ARE TO BE LEFT IN PLACE FOR A MIN. OF ONE DAY AFTER POUR. FORM WORK SHOULD BE COORDINATED WITH ALL TRADES FOR PROVISION OF ALL SLEEVES, CHASES, AND KNOCK-OUTS FOR OTHER WORK.

4. A MOISTURE BARRIER IS TO BE PLACED ON THE EARTH OR SAND, FREE OF SHARP OBJECTS, ORGANIC MATERIAL OR RUBBLE. ALL JOINTS OF MEMBRANE SHALL BE LAPPED 6", WITH JOINTS CEMENTED OR TAPED. MEMBRANE THICKNESS SHALL BE A MIN. OF .006 MIL. A MIN. OF 2" OF CLEAN SAND SHALL BE PLACED OVER BARRIER, WITH ALL PENETRATIONS OF MEMBRANE TAPED.

5. ALL CONCRETE SHALL BE PLACED SUBJECT TO THE FOLLOWING TOLERANCES:
LINEAR LINES: ±1/4" IN 20'-0".
PLUMB: ±1/4" IN 10'-0".
SLAB DEVIATION WITH A TRUE PLANE, MULTI-DIRECTIONAL, NOT TO EXCEED ±1/8" IN 10'-0".

6. CONCRETE SHALL NOT BE ALLOWED TO FREE FALL FROM ANY HEIGHT WHICH WOULD TEND TO CAUSE, OR RESULT IN, SEGREGATION OF THE MIX. IN NO CASE WILL SUCH HEIGHT RESTRICTIONS BE GREATER THAN 5'. TRUCKS OR ADDITIONAL CHUTES SHALL BE PROVIDED WHERE THIS CONDITION OCCURS.

7. ALL CONCRETE WORK SHALL BE MONOLITHIC; NO TOPPING WILL BE REQUIRED OR PERMITTED UNLESS EXPRESSLY INDICATED ON THE DRAWINGS.

8. SHOULD THE CONCRETE HAVE EXCESSIVE POCKETS OR IF ANY REINFORCING STEEL IS EXPOSED, OR IF CONCRETE DOES NOT COMPLY IN ANY OTHER WAY WITH THE DRAWINGS AND SPECIFICATIONS, THE DEFECTIVE CONCRETE SHALL BE REMOVED AND REPLACED AS DIRECTED BY THE ENGINEER.

9. ALL SLABS ARE TO BE FINISHED WITH A POWER DRIVEN DISC FLOAT ONLY. DUSTING OF CONCRETE WITH DRY CEMENT TO ABSORB EXCESS WATER IS PROHIBITED.

10. AFTER THE INITIAL CONCRETE SET, CONCRETE SHALL BE HAND TROWELLED TO A SMOOTH FINISH SURFACE, FREE OF ANY TOOL MARKS, EXPOSED AGGREGATE, OR OTHER DEFECTS.

11. ALL CONCRETE WORK SHALL BE CLEANED AND PATCHED TO A UNIFORM FINISH. ALL HIGH SPOTS, SLUMPS, EDGES, ETC., SHALL BE REMOVED AS DIRECTED BY THE OWNER OR THE ENGINEER.

12. ALL MOULDS, ORNAMENTS, GROOVES, CUPS, ANCHOR BOLTS, ETC. SHOWN ON ARCHITECTURAL DRAWINGS SHALL BE PROVIDED FOR IN THE FORM WORK BEFORE THE CONCRETE IS POURED.

13. REFER TO BOTH ARCHITECTURAL AND MECHANICAL DRAWINGS FOR LOCATION AND SPACING OF ALL PLUMBING FIXTURES.

14. SIDES OF FOOTINGS MAY BE POURED AGAINST NEAT EXCAVATION IF CAVING DOES NOT OCCUR. SEE DETAILS.

15. NO PIPES OR DUCTS SHALL BE PLACED IN CONCRETE WALLS OR SLAB UNLESS SPECIFICALLY DETAILED.

16. REINFORCING STEEL SHALL BE INTERMEDIATE GRADE DEFORMED BARS AND SHALL CONFORM TO ASTM A615-GR-40. FABRICATING DETAILS SHALL CONFORM TO ACI MANUAL OF STANDARDS OF PRACTICE.

17. SPLICES IN REINFORCING STEEL SHALL BE LAPPED 30 DIAMS. MIN. STEEL MAY BE TIED AT SPLICES.

18. ALL WELDING OF REINFORCING STEEL SHALL BE WITH LOW HYDROGEN ELECTRODES UNLESS OTHERWISE NOTED AND BE INSPECTED BY APPROVED TESTING LAB PRIOR TO POUR.

19. ALL REINFORCING STEEL, ANCHOR BOLTS, DOWELS AND OTHER INSERTS SHALL BE WELL SECURED IN POSITION PRIOR TO POURING CONCRETE.

20. THE QUALITY AND DESIGN OF CONCRETE SHALL BE IN ACCORDANCE WITH THE CBC EXCEPT ITEMS NOT SPECIFICALLY COVERED THERE IN SHALL BE ALSO IN CONFORMANCE WITH ACI 318. CONCRETE SUPPLIER SHALL SUBMIT MIX DESIGN TO LAB OF RECORD FOR REVIEW.

21. ALL REINFORCING SHALL HAVE A MINIMUM CONCRETE COVER AS FOLLOWS, UNLESS OTHERWISE NOTED:

SURFACES POURED AGAINST EARTH . . . . . 3"
FORMED SURFACES EXPOSED TO GROUND . . . . 2"

22. NOMINAL FINISH FLOOR ELEVATION: +0'-0"

23. ALL FOOTINGS SHALL EXTEND TO FIRM BEARING IN UNDISTURBED SOIL, 1'-0" MIN. (SEE DETAILS, UNLESS OTHERWISE SPECIFIED) OR APPROVED COMPACTED FILL.

24. SEE ARCHITECTURAL DRAWINGS FOR LOCATION AND EXTENT OF EXTERIOR WALKWAYS.

25. SEE ARCHITECTURAL DRAWINGS FOR SIZE AND LOCATION OF NONBEARING PARTITIONS.

26. ALL SLABS ON GRADE SHALL BE 4" THICK UNLESS OTHERWISE NOTED. REINFORCING - #3 @ 18" O/C E.W. OR #10/#10 6" X 6" UNLESS NOTED OTHERWISE.

27. SEE WALL SECTIONS FOR DOWELS PROJECTING FROM FOOTINGS.

28. FOR LOCATIONS OF CONTROL JOINTS IN FLOOR SLAB SEE ARCHITECTURAL AND STRUCTURAL DRAWINGS. 20'-0" MIN. EACH WAY UNLESS NOTED OTHERWISE.

29. CONSTRUCTION JOINTS (CJ) AS SHOWN ON FOUNDATION PLAN, ARCHITECTURAL DRAWINGS.

30. 5 SACKS OF CEMENT ARE REQUIRED PER CUBIC YARD OF CONCRETE PER KERN COUNTY CODE OF BUILDING REGULATIONS 17.08.170

GLULAM:

FOR CAMBER USE 1200' RADIUS

1.0 GENERAL

1.1 SCOPE
THIS WORK INCLUDES THE COMPLETE FURNISHING AND INSTALLATION OF ALL STANDARD STRUCTURES INC. GLUED LAMINATED BEAMS AS SHOWN ON THE DRAWINGS HEREIN SPECIFIED AND NECESSARY TO COMPLETE THE WORK

1.2 CODE APPROVALS
THESE PRODUCTS SHALL BE DESIGNED AND MANUFACTURED TO THE STANDARDS SET FORTH IN ANSI STANDARD A190.1 AND ICBO REPORT ER-5714

1.3 TRADEMARKS
MEMBERS SHALL BE MARKED WITH THE INDEPENDENT QUALITY AUDIT COMPANY INDICATING CONFORMANCE WITH THE MANUFACTURING, QUALITY ASSURANCE AND MARKETING PROVISIONS OF ANSI STANDARD A190.1

1.4 RELATED WORK SPECIFIED ELSEWHERE
A. CARPENTRY AND MILLWORK
B. OPEN WEB WOOD TRUSSES
C. COMPOSITE WOOD I-JOISTS

1.5 SUBMITTALS
A SHOP DRAWINGS
WHEN REQUESTED, SHOP DRAWINGS SHOWING LAYOUT AND DETAILS NECESSARY FOR PROPER PRODUCT PLACEMENT IN THE BUILDING MAY BE PROVIDED BY STANDARD STRUCTURES INC.
B. PRODUCTION
DO NOT PROCEED WITH FABRICATION AND/OR CUTTING UNTIL SHOP DRAWINGS AND DESIGN CALCULATIONS (WHEN REQUIRED) HAVE BEEN REVIEWED BY THE ARCHITECT AND OR ENGINEER OF RECORD

2.0 GENERAL

2.1 MATERIALS
A. LUMBER: 2 INCH (NOMINAL) LAMINATIONS, MOISTURE CONTENT OF ALL LUMBER AT THE TIME OF MANUFACTURE SHALL NOT EXCEED 15%
B. ADHESIVE: ASTM D2559: EXTERIOR TYPE

2.2 FABRICATION
A. SIMPLY SUPPORTED MEMBERS: COMBINATION 24F-V4
B. BEAMS, CONTINUOUS OR CANTILEVERED: COMBINATION 24F-V8

2.3 APPEARANCE
A. INDUSTRIAL GRADE, EXCEPT USE ARCHITECTURAL APPEARANCE GRADE WHERE NOTED OR EXPOSED TO VIEW

3.0 EXECUTION

3.1 ERECTION AND INSTALLATION
A. STANDARD STRUCTURES INC GLULAM BEAMS, IF STORED PRIOR TO ERECTION, SHALL BE STORED OFF THE GROUND POSITION AND PROTECTED FROM THE WEATHER. THEY SHALL BE HANDLED WITH CARE SO THEY ARE NOT DAMAGED. THEY ARE TO BE ERECTED AND INSTALLED IN ACCORDANCE WITH THE PLANS AND ANY STANDARD STRUCTURES INC. DRAWING AND INSTALLATION SUGGESTIONS THAT MAY BE PROVIDED. TEMPORARY CONSTRUCTION LOADS THAT CAUSE STRESSES BEYOND DESIGN LIMITS ARE NOT PERMITTED. APPARENT DAMAGE TO GLULAM BEAMS IF ANY, SHALL BE REPORTED TO STANDARD STRUCTURES INC. PRIOR TO INSTALLATION.
B. GLUED- LAMINATED BEAM INSPECTION CERTIFICATES SHALL BE SUBMITTED TO THE FIELD INSPAECTOR PRIOR TO COMPLETION OF THE FRAME INSPECTION IN ACCORDANCE WITH CBC 1704.6.2

3.2 WARRANTY
THE PRODUCT DELIVERED SHALL BE FREE FROM MANUFACTURING ERRORS OR DEFECTS IN WORKMANSHIP AND MATERIAL.

EMBEDDED ITEMS:

1. ALL REINFORCING STEEL SHALL BE CONTINUOUS. STEEL SHALL BE LAPPED 30 BAR DIAMETERS MIN. IN CONCRETE UNLESS OTHERWISE NOTED, AND BARS SHALL BE BENT WITH A MIN. BEND RADIUS EQUAL TO THREE TIMES THE BAR DIAMETER.

2. BARS SHALL NOT BE HEATED TO FACILITATE BENDING OR ANY OTHER PURPOSE.

3. ALL REINFORCING STEEL SHALL BE LOCATED ACCURATELY IN FORMS AND HELD FIRMLY IN PLACE BEFORE AND DURING CONCRETE PLACEMENT BY MEANS OF WIRE SUPPORTS ADEQUATE TO PREVENT DISPLACEMENT DURING THE COURSE OF CONSTRUCTION AND TO KEEP AT PROPER DISTANCE FROM THE FORMS. BAR SUPPORTS ARE TO BE SUFFICIENT IN NUMBER AND SUFFICIENTLY HEAVY TO CARRY PROPERLY THE STEEL THEY SUPPORT. UNDER NO CONDITION SHALL CONCRETE BE PLACED WITHOUT ADEQUATE TIES OR SUPPORTS. SEE CONCRETE NOTES ABOVE FOR PROPER REINFORCING STEEL COVERAGE.

4. BEFORE BEING PLACED, ALL MATERIALS SHALL BE CLEANED THOROUGHLY OF ALL CONCRETE, RUST, DIRT, DUST, OIL AND ANY OTHER MATERIAL DELETERIOUS TO BONDING OF CONCRETE.

5. ALL REINFORCING STEEL SHALL CONFORM TO ASTM A-615-40.

6. WIRE MESH IN SLABS SHALL CONFORM TO ASTM A185.

7. FOUNDATION ANCHOR BOLTS SHALL BE 1/2" DIAMETER MIN. STEEL BOLT WITH WASHER AND NUT, WITH 7" MIN. EMBEDMENT INTO CONCRETE, UNLESS OTHERWISE NOTED. MAX. SPACING SHALL BE 6'-0" AND 12" FROM ENDS AND ALL BREAKS. ALL PLATES SHALL HAVE A MIN. OF 2 ANCHOR BOLTS AND SHALL BE DRILLED FOR ANCHOR BOLTS.

8. ANCHOR BOLTS LARGER THAN 1/2" DIAMETER ARE PROVIDED IN MANY SHEAR WALLS. ALL OF THESE BOLTS SHALL BE EMBEDDED TO A DEPTH EQUAL TO 15 TIMES THE BOLT DIAMETER, INTO CONCRETE. ALL BOLTS SHALL BE PREWIRED INTO FORMS PRIOR TO THE PLACEMENT OF CONCRETE.

9. BOLTS AND UPLIFT ANCHORS SHALL BE FABRICATED OF ASTM A-36 BAR STOCK AND SHALL HAVE HOOKS BENT AT A MIN. BEND RADIUS OF 4 BAR DIAMETERS. ALL BOLTS SHALL BE PREWIRED INTO FORMS PRIOR TO PLACEMENT OF CONCRETE AND AT A DEPTH AS SHOWN IN UPLIFT ANCHOR DETAILS.

STRUCTURAL STEEL:

1. STRUCTURAL STEEL SHALL BE ASTM DESIGNATION A-36.

2. TUBE COLUMNS SHALL BE ASTM DESIGNATION A-500, GRADE B.

3. STRUCTURAL STEEL WORKMANSHIP AND DETAILING SHALL CONFORM TO LATEST AWS STANDARDS. USE E-70 ELECTRODES.

4. STEEL FABRICATOR SHALL OBTAIN THE STRUCTURAL ENGINEERS, AND/OR ARCHITECT'S APPROVAL OF SHOP DRAWINGS PRIOR TO FABRICATION.

5. ALL FILLET WELDS WERE DESIGNED FOR ONE-HALF OF ALLOWABLE WELD STRESS. ALL OTHER WELDS REQUIRE SPECIAL INSPECTION BY AN APPROVED TESTING LAB USING CODE ACCEPTED METHODS.

6. BOLTS SHALL BE ASTM A-307. U.N.O.

7. ALL WELDS TO BE PERFORMED BY A CERTIFIED WELDER.

BOLTS, LAG SCREWS, AND THREADED RODS:

1. ALL THREADED RODS SHALL BE FABRICATED FROM ASTM A-36 BAR STOCK.
2. ALL OTHER BOLTS SHALL BE ASTM A-307, UNLESS OTHERWISE SPECIFIED.

CONCRETE BLOCK NOTES:

1. ALL CONCRETE BLOCK UNITS SHALL BE GRADE 'N' TYPE 1 CONFORMING TO ASTM C-90.

2. GROUT AND MORTAR SHALL TEST 2,500 PSI MIN. AT 28 DAYS AND, SHALL BE IN COMPLIANCE WITH THE LATEST CBC AND LOCAL CODES, ETC.

3. HORIZONTAL BARS SHALL BE PLACED IN BOND BEAM UNITS.

4. VERTICAL BARS SHALL BE PLACED 2" FROM FACE OF WALL, ALTERNATE FACES EXCEPT AS NOTED OTHERWISE AND SHALL BE HELD IN POSITION TOP AND BOTTOM AND INTERVAL NOT EXCEEDING 192 DIAMTERS.

5. ALL CORNER CELLS AND END CELLS SHALL HAVE TWO VERTICAL BARS EXCEPT AS SHOWN.

6. HORIZONTAL BARS AT SPLICES AND CORNERS SHALL HAVE 24" MIN. OR 40 BAR DIAMETER LAP WHICH EVER IS GREATER. VERTICAL REBARS SHALL BE FULL HEIGHT (BUT MAY BE SPLICED WITH 40 BAR DIAMETER LAP).

7. PROVIDE FOUNDATION DOWELS TO MATCH VERTICAL STEEL.

8. ALL CELLS SHALL BE GROUTED SOLIDLY UNLESS NOTED OTHERWISE ON FOUNDATION PLAN.

9. LINTEL BEAM OVER OPENING SHALL BE GROUTED COMPLETELY IN A SINGLE CONTINUOUS OPERATION.

10. CLEAN OUT REQUIRED AT THE BOTTOM OF ALL CELLS OF EACH POUR WHEN GROUT POUR IS IN EXCESS OF 4'-0" IN HEIGHT.

11. ALL WORK SHALL BE DONE IN COMPLIANCE WITH THE LATEST CBC (2007).

12. VERTICAL REINFORCING SHALL BE CENTERED IN OPEN END UNITS AND SET BEFORE BLOCK WORK COMMENCES.

13. LIGHT WEIGHT CONCRETE BLOCK SPECIFICATIONS:
LIGHT WEIGHT CONCRETE BLOCK SHALL WEIGH 72 LBS. PER SQUARE FOOT AS MANUFACTURED BY CALCRETE OR APPROVED EQUAL.

14. ALL BAR LAPS TO BE WIRED TOGETHER @ 8" o.c. (TYP)

15. CMU BLOCKS f'm=1,500 psi

ALLOWABLE SOIL BEARING PRESSURE = 1500 psf

ALL CONSTRUCTION SHALL COMPLY WITH THE ADOPTED ORDINANCES AND POLICIES OF THE GOVERNING AGENCY, COUNTY OF KERN, AND THE LATEST ADOPTED EDITIONS OF THE FOLLOWING:

CALIFORNIA BUILDING CODE (CBC)	2007
AISC STEEL MANUAL 9TH EDITION	
ACI	
NDS	1997

P.E. INCORPORATED
PASQUINI ENGINEERING
903 H Street Suite 300
Bakersfield, Ca. 93304
Telephone: (661)-328-9600
Fax: (661)-328-9030

NO.	DATE

SUBWAY
SUITE B
8960 FLETCHER PKWY
LA MESA, CA 91942

THESE PLANS ARE NOT FOR CONSTRUCTION UNLESS A "WET STAMP & SIGNATURE" FROM BOTH THE ENGINEER OF RECORD AND A APPROVAL STAMP WITH A "WET STAMP & SIGNATURE" FROM THE LOCAL GOVERNING AGENCY ARE PRESENT.

DWG. BY	J.P.
CHK'D BY	
DATE	7/30/2010
JOB NO.	6190
FILE NO.	619022

EXP. 12/31/10

SHEET **S-1** OF SHEET

PRINTED: 10/8/2010