1.) LOCATE GRAB BARS ON EACH SIDE OR ON ONE SIDE AND BEHIND TOILET, 33 INCHES ABOVE AND PARALLEL TO THE FLOOR.
2.) SIDE BARS TO BE 42 INCHES LONG WITH FRONT END 24 INCHES IN FRONT OF TOILET
3.) BACK BARS TO BE 36 INCHES LONG.
4.) DIAMETER OR WIDTH OF GRIPPING SURFACE SHALL BE 1-1/4 INCHES TO 1-1/2 INCH, OR SHAPE SHALL PROVIDE AN EQUIVALENT GRIPPING SURFACE.
5.) GRAB BARS SHALL HAVE 1-1/2 INCHES BETWEEN ADJACENT WALL AND GRAB BAR.
6.) GRAB BARS SHALL NOT ROTATE.
7.) GRAB BARS AND ANY WALL OR OTHER SURFACE ADJACENT TO IT SHALL BE FREE OF ANY SHARP OR ABRASIVE ELEMENTS.
8.) EDGES SHALL HAVE A MINIMUM RADIUS OF 1/8 INCH.
9.) GRAB BARS AND MOUNTING SHALL WITHSTAND 250 LBS./SIDE, 500 LBS. TOTAL WT./MIDDLE

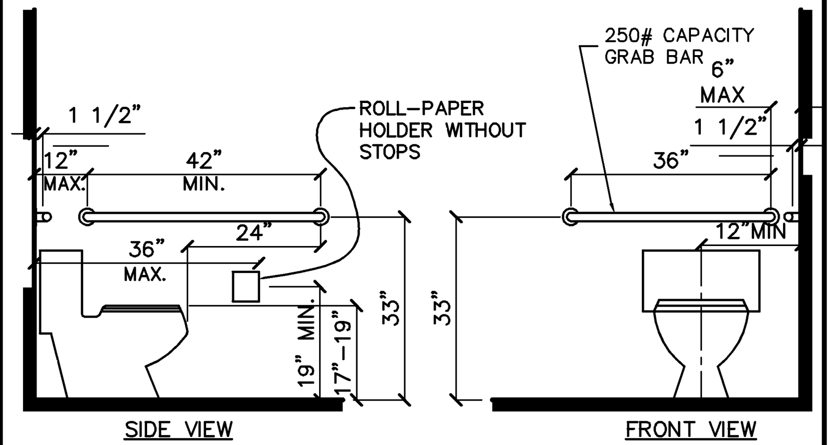

TOILET GRAB BAR LOCATIONS

D1212

13 TOILET GRAB BAR REQUIREMENTS

WALKS AND SIDEWALKS SHALL HAVE A CONTINUOUS COMMON SURFACE, NOT INTERRUPTED BY STEPS OR BY ABRUPT CHANGES IN LEVEL EXCEEDING 1/2 INCH AND SHALL BE A MINIMUM 48 INCHES IN WIDTH. SURFACES SHALL BE AS SLIP-RESISTANT FOLLOWS:
SURFACE WITH A SLOPE OF LESS THAN 6 PRECENT GRADIENT SHALL BE AT LEAST AS SLIP-RESISTANT AS THAT DESCRIBED AS A MEDIUM SALTED FINISH.
SURFACE WITH A SLOPE OF 6 PERCENT GRADIENT OR GREATER SHALL BE SLIP-RESISTANT.
SURFACE CROSS SLOPES SHALL NOT EXCEED 1/4 INCH PER FOOT EXCEPT WHEN THE ENFORCING AGENCY FINDS THAT DUE TO LOCAL CONDITIONS IT CREATES AN UNREASONABLE HARDSHIP, THE CROSS SLOPE SHALL BE INCREASED TO A MAXIMUM 1/2 INCH PER FOOT FOR DISTANCES NOT TO EXCEED 20 FEET.
EXCEPTION: WHEN BECAUSE OF RIGHT-OF-WAY RESTRICTIONS, NATURAL BARRIERS, OR OTHER EXISTING CONDITIONS, THE ENFORCING AGENCY DETERMINES THAT COMPLIANCE WITH THE 48 INCH, CLEAR SIDEWALK WIDTH WOULD CREATE AN UNREASONABLE HARDSHIP, THE CLEAR WIDTH MAY BE REDUCED TO 36 INCHES.
GRATINGS: WALKS, SIDEWALKS AND PEDESTRIAN WAYS SHALL BE FREE OF GRATINGS WHENEVER POSSIBLE. FOR GRATINGS LOCATED IN THE SURFACE OF ANY OF THESE AREAS, GRID OPENINGS SHALL BE LIMITED TO 1/2 INCH IN THE DIRECTION OF TRAFFIC.
WHEN THE SLOPE IN THE DIRECTION OF TRAVEL OF ANY WALK EXCEEDS 1 VERTICAL TO 2 HORIZONTAL (5 PERCENT GRADIENT) IT SHALL COMPLY WITH THE REQUIREMNENTS OF PEDESTRIAN RAMPS.
ABRUPT CHANGES IN LEVEL ALONG ANY ACCESSIBLE ROUTE SHALL NOT EXCEED 1/2 INCH.
WHEN CHANGES IN LEVEL DO OCCUR, THEY SHALL BE BEVELED WITH A SLOPE NO GREATER THAN 1:2, EXCEPT THAT LEVEL CHANGES NOT EXCEEDING 1/4 INCH MAY BE VERTICAL.
WHEN CHANGES IN LEVELS GREATER THAN 1/2 INCH ARE NECESSARY THEY SHALL COMPLY WITH THE REQUIREMENTS FOR CURB RAMPS. (SEE DETAIL 8/HC-1)
LEVEL AREAS: WALKS SHALL BE PROVIDED WITH A LEVEL AREA NOT LESS THAN 60 INCHES BT 60 INCHES AT A DOOR OR GATE THAT SWINGS TOWARD THE WALK, AND NOT LESS THAN THE REQUIREMENTS FOR PUSH SIDE APPROACH (SEE DETAIL 18/HC-2)
WALKS WITH CONTINUOUS GRADIENTS: ALL WALKS WITH CONTINUOUS GRADIENTS SHALL HAVE LEVEL AREAS AT LEAST 5 FEET IN LENGTH AT INTERVALS OF AT LEAST EVERY 400 FEET.
IF CARPET OR CARPET TILE IS USED ON A GROUND OR FLOOR SURFACE, THEN IT SHALL BE SECURELY ATTACHED; HAVE A FIRM CUSHION, PAD, OR BACKING, OR NO CUSHION OR PAD; AND HAVE A LEVEL LOOP, TEXTURED LOOP, LEVEL CUT PILE, OR LEVEL CUT/UNCUT PILE TEXTURED. THE MAXIMUM PILE THICKNESS SHALL BE 1/2 INCH. EXPOSED EDGES OF CARPET SHALL BE FASTENED TO THE FLOOR SURFACE AND HAVE TRIM ALONG THE ENTIRE LENGTH OF THE EXPOSED EDGE. CARPET EDGE TRIM SHALL COMPLY WITH THE REQUIREMENTS REQUIRED FOR ABRUPT CHANGES IN LEVEL AS PREVIOUSLY DESCRIBED.
WARNING CURBS: ABRUPT CHANGES IN LEVEL, EXCEPT BETWEEN A WALK OR SIDEWALK AND AN ADJACENT STREET OR DRIVEWAY, EXCEEDING 4 INCHES IN A VERTICAL DIMENSION, SUCH AS AT PLANTERS OR FOUNTAINS LOCATED IN OR ADJACENT TO WALKS, SIDEWALKS, OR OTHER PEDESTRIAN WAYS, SHALL BE IDENTIFIED BY CURBS PROJECTING AT LEAST 6 INCHES IN HEIGHT ABOVE THE WALK OR SIDEWALK SURFACE TO WARN THE BLIND OF A POTENTIAL DROP OFF. WHEN A GUARDRAIL OR HANDRAIL IS PROVIDED, NO CURB IS REQUIRED WHEN A GUIDE RAIL IS PROVIDED CENTERED 3 INCHES PLUS OR MINUS ONE INCH ABOVE THE SURFACE OF THE WALK OR SIDEWALK, THE WALK IS 5 PERCENT OF LESS GRADIENT OR NO ADJACENT HAZARDS EXIST.

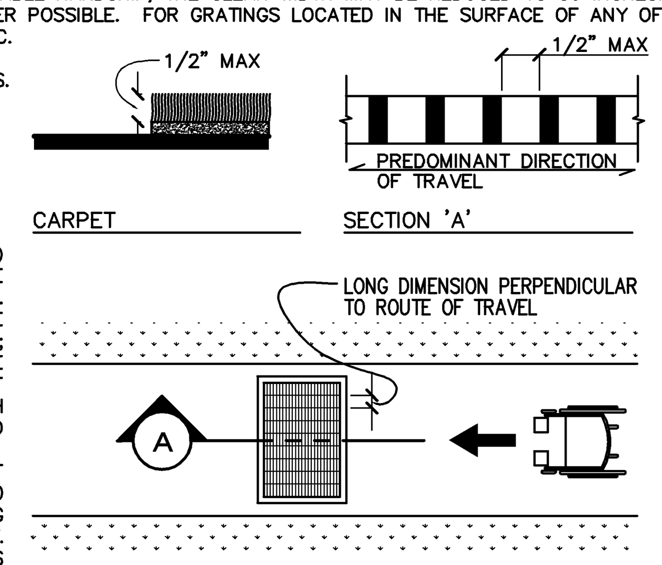

D1218

10 GROUND AND FLOOR SURFACE

THESE REQUIREMENTS SHALL APPLY TO LAVATORY FIXTURES, VANITIES, AND BUILT-IN LAVATORIES.

1.) LAVATORIES SHALL BE MOUNTED WITH THE RIM OR COUNTER SURFACE NO HIGHER THAN 34 INCHES ABOVE THE FINISH FLOOR. PROVIDE A CLEARANCE OF AT LEAST 29 INCHES ABOVE THE FINISH FLOOR TO THE BOTTOM OF THE APRON. KNEE AND TOE CLEARANCE SHALL BE PROVIDED. KNEE CLEARANCE SHALL BE 30 INCHES WIDE, 8 INCHES DEEP FROM THE FRONT OF LAVATORY AT 27 INCHES ABOVE FINISH FLOOR. TOE CLEARANCE SHALL BE 30 INCHES WIDE, 19 INCHES DEEP FROM FRONT OF LAVATORY WITH A MAXIMUM 6 INCHES DEEP AT A MIMIMUM 9 INCHES ABOVE FINISH FLOOR. SEE FIGURE FOR CLARIFACATION.
2.) CLEAR FLOOR SPACE: A CLEAR FLOOR SPACE 30 INCHES BY 48 INCHES SHALL BE PROVIDED IN FRONT OF A LAVATORY TO ALLOW FOWARD APPROACH. SUCH CLEAR FLOOR SPACE SHALL ADJOIN OR OVERLAP AN ACCESSIBLE ROUTE AND SHALL EXTEND A MAXIMUM 19 INCHES UNDERNEATH THE LAVATORY.
3.) EXPOSED PIPES AND SURFACES: HOT WATER AND DRAIN PIPES UNDER LAVATORIES SHALL BE INSULATED OR OTHERWISE CONFIGURED TO PROTECT AGAINST CONTACT. THERE SHALL BE NO SHARP OR ABRASIVE SURFACES UNDER LAVORTIES.
4.) FAUCETS: CONTROLS AND OPERATING MECHANISMS SHALL BE OPERABLE WITH ONE HAND AND SHALL NOT REQUIRE TIGHT GRASPING, PINCHING, OR TWISTING OF THE WRIST. THE FORCE REQUIRED TO ACTIVATE CONTROLS SHALL BE NO GREATER THAN 5 LBF. LEVER-OPERATED, PUSH-TYPE, AND ELECTRONICALLY CONTROLLED MECHANISMS ARE EXAMPLES OF ACCEPTABLE DESIGNS. IF SELF CLOSING VALVES ARE USED THE FAUCET SHALL REMAIN OPEN FOR AT LEAST 10 SECONDS.
5.) MIRRORS: MIRRORS SHALL BE MOUNTED WITH THE BOTTOM EDGE OF THE REFLECTED SURFACE NO HIGHER THAN 40 INCHES ABOVE THE FINISH FLOOR.

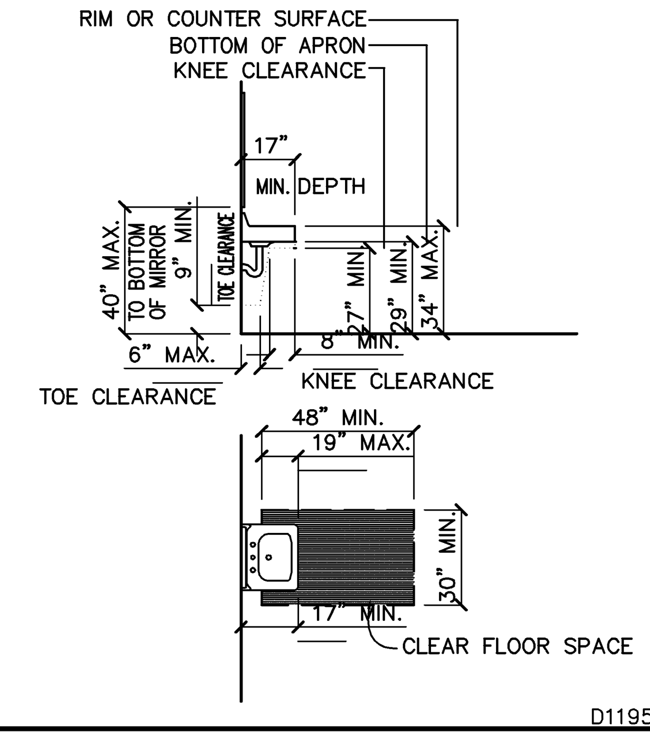

D1195

5 LAVATORIES AND MIRRORS 1/4"

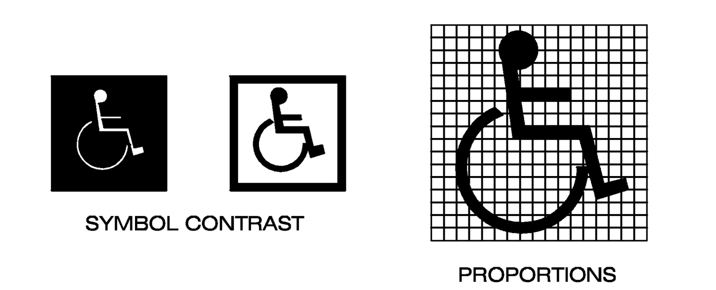

1.) THE INTERNATIONAL SYMBOL OF ACCESSIBLITY SHALL BE THE STANDARD USED TO IDENTIFY FACILITES THAT ARE ACCESSIBLE TO AND USABLE BY PHYSICALLY DISABLED PERSONS.
2.) COLOR OF SYMBOL: SYMBOL SHALL CONSIST OF OF WHITE FIGURE ON A BLUE BACKGROUND. THE BLUE BACKGROUND SHALL BE EQUAL TO COLOR # 15090 IN FEDERAL STANDARD 595a.

EXCEPTION:
THE APPROPRIATE ENFORCEMENT AGENCY MAY APPROVE SPECIAL SIGNS AND IDENTIFICATION NECESSARY TO COMPLEMENT DECOR OR UNIQUE DESIGN WHEN IT IS DETERMINED THAT SUCH SIGNS AND IDENTIFICATION PROVIDE ADEQUATE DIRECTION TO PERSONS WITH DISABILITES

3.) FINISH AND CONTRAST: THE CHARACTERS AND BACKGROUNDS OF SIGNS SHALL BE EGGSHELL, MATTE, OR OTHER NON-GLARE FINISH CHARACTERS AND SYMBOL SHALL CONTRAST WITH THEIR BACKGROUND, EITHER LIGHT CHARACTERS ON A DARK BACKGROUND OR DARK CHARACTERS ON A LIGHT BACKGROUND

D1190

1 INTERNATIONAL SYMBOL OF ACCESSIBLITY

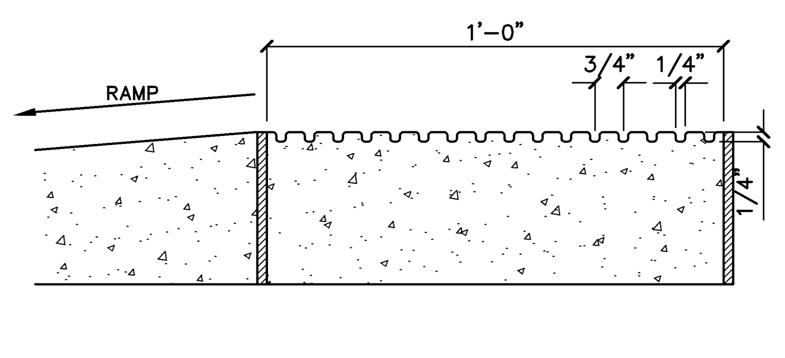

14 GROOVED BORDER 3"

ACCESSIBLE TOILET FACILITIES SHALL BE ON AN ACCESSIBLE ROUTE.
THERE SHALL BE SUFFICIENT SPACE IN THE TOILET ROOM FOR A WHELLCHAIR MEASURING 30 INCHES WIDE BY 48 INCHES LONG TO ENTER THE ROOM AND PERMIT THE DOOR TO CLOSE.
ALL DOORS TO ACCESSIBLE TOILET FACILITIES SHALL COMPLY WITH THE A.D.A.A.G. AND TITLE-24 REQUIREMENTS. (SEE DETAIL18/HC-2)
NO DOOR SHALL ENCROACH INTO THE CLEAR FLOOR SPACE REQUIRED FOR ANY FIXTURE.
THE LAVITORY SHALL BE CENTER 18 INCHES FROM THE ADJACENT WALL.
CLEAR FLOOR SPACE REQUIRED FOR LAVITORIES AND URINALS: (SEE DETAILS 6/HC-1 & 7/HC-1)
WATER CLOSETS: MULTIPLE ACCOMMADATION TOILET FACLITIES; AT LEAST ONE SHALL BE ACCESSIBLE; WHERE 6 OR MORE ARE PROVDED, IN ADDITION TO THE ACCESSIBLE STALL, AT LEAST ONE STALL SHALL BE 36 INCHES WIDE WITH AN OUTWARD SWINGING SELF-CLOSING DOOR AND PARALLEL GRAB BARS. (SEE DETAILS 13/HC-1 & 'A-A')
THE WATER CLOSET SHALL BE CENTER 18 INCHES FROM THE ADJACENT WALL.
THE WATER CLOSET SHALL BE LOCATED IN A SPACE WHICH PROVIDES A MINIMUM 28 INCHES WIDE CLEAR FROM A FIXTURE OR A MINIMUM 42 INCHES CENTERED FROM THE WATER CLOSET TO THE ADJACENT WALL. THERE SHALL BE A MINIMUM 48 INCHES CLEAR FROM THE FRONT EDGE OF THE WATER CLOSET.
HEIGHT: TOILET HEIGHT SHALL BE 17 INCHES TO 19 INCHES MEASURED TO THE TOP OF THE TOILET SEAT ABOVE FINISH FLOOR.
TOILET SEATS SHALL NOT BE SPRUNG TO RETURN TO A LIFTED POSITION.
FLUSH CONTROLS SHALL BE HAND OPERATED OR AUTOMATIC.
CONTROLS AND OPERATING MECHANISMS SHALL BE OPERABLE WITH ONE HAND AND SHALL NOT REQUIRE TIGHT GRASPING, PINCHING, OR TWISTING OF THE WRIST. THE FORCE REQUIRED TO ACTIVATE CONTROLS SHALL BE NO GREATER THAN 5 LBF.
FLUSH CONTROLS SHALL BE MOUNTED ON THE WIDE SIDE OF TOILET AREAS NO MORE THAN 44 INCHES ABOVE FINISH FLOOR.
GRAB BARS: (SEE DETAIL 13/HC-1)
SIZE AND ARRANGEMENT: SEE DETAILS
TOE CLEARACES: IN ACCESSIBLE STALLS, THE FRONT PARTITION AND AT LEAST ONE SIDE PARTITION SHALL PROVIDE A TOE CLEARANCE OF AT LEAST 9 INCHES ABOVE FINISH FLOOR. IF THE DEPTH OF THE STALL IS GREATER THAN 60 INCHES, THEN NO TOE CLEARANCE IS REQUIRED.
IDENTIFICATION: (SEE DETAIL 9-HC-1)
WATER CLOSET BOWLS USED FOR PUBLIC USE SHALL BE ELONGATED IN DESIGN AND EQUIPPED WITH AN OPEN FRONT.

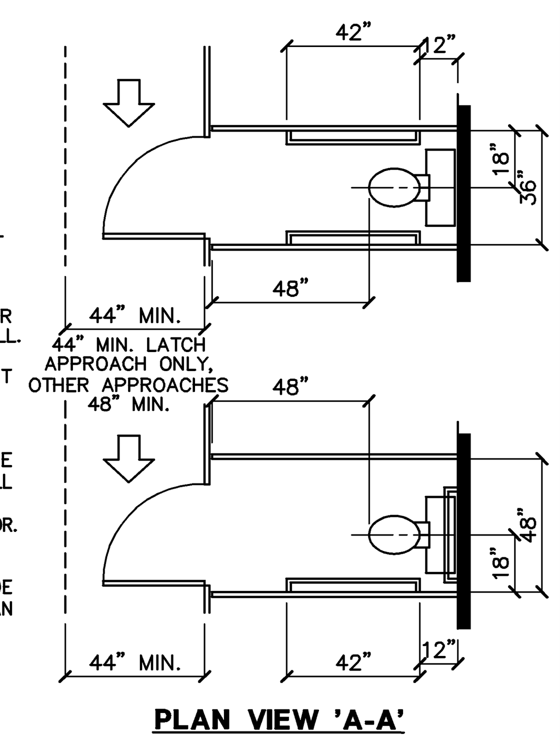

PLAN VIEW 'A-A'

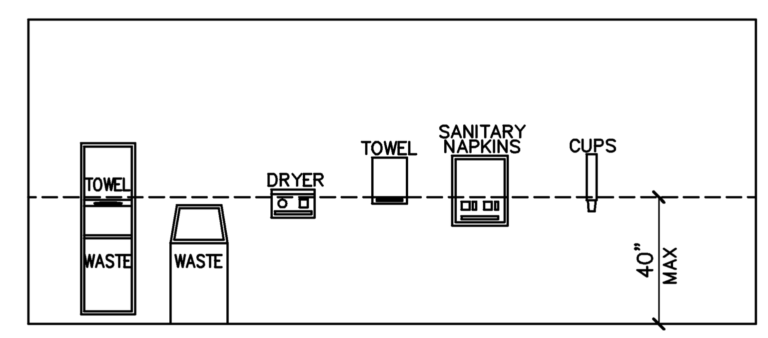

1.) WHERE TOWEL, SANITARY NAPKIN, AND WASTE RECEPTACLES AND SIMILAR DISPENSING AND DISPOSAL FIXTURES ARE PROVIDED, AT LEAST ONE OF EACH TYPE SHALL BE LOCATED WITH ALL OPERABLE PARTS, INCLUDING COIN SLOTS AND SOAP DISPENCERS, WITHIN 40 INCHES FROM THE FINISH FLOOR.

D1213

7 TOILET ROOM ACCESSORIES

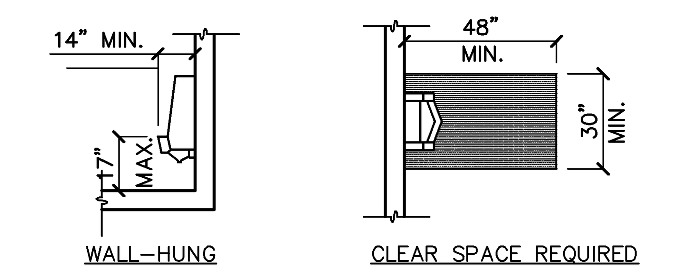

1. WHERE URINALS ARE PROVIDED, AT LEAST ONE URINAL SHALL COMPLY WITH ALL OF THE FOLLOWING REQUIREMENTS.
2. URINALS SHALL BE WALL HUNG WITH AN ELONGATED RIM PROJECTING 14 INCHES FROM THE WALL AND AT A MAXIMUM OF 17 INCHES ABOVE THE FINISH FLOOR.
3. CLEAR FLOOR SPACE SHALL BE 30 INCHES BY 48 INCHES.
4. FLUSH CONTROLS SHALL BE HAND OPERATED OR AUTOMATIC. CONTROLS AND OPERATING MECHANISMS SHALL BE OPERABLE WITH ONE HAND AND SHALL NOT REQUIRE TIGHT GRASPING, PINCHING, OR TWISTING OF THE WRIST. THE FORCE REQUIRED TO ACTIVATE CONTROLS SHAL BE NO GREATER THAN 5 LBF. CONTROLS SHALL BE MOUNTED NO GREATER THAN 44 INCHES ABOVE FINISH FLOOR.

D1193

6 ACCESSIBLE URINALS 1/4"

ENTRANCE TO OFF STREET PARKING

1.) POST A PERMANENT SIGN 17" x 22", IN A CONSPICUOUS PLACE, AT EACH ENTRANCE TO OFF STREET PARKING FACILITIES, OR IMMEDIATELY ADJACENT TO AND VISIBLE FROM EACH STALL. LETTERING SHALL NOT BE LESS THAN 1 INCH IN HEIGHT, WHICH CLEARLY AND CONSPICUOUSLY STATES THE FOLLOWING.

"UNAUTHORIZED VEHICLES PARKED IN DESIGNATED ACCESSIBLE SPACES NOT DISPLAYING DISTINGUISHING PLACARDS OR LICENSE PLATES ISSUED FOR PERSONS WITH DISABILITIES MAY BE TOWED AWAY AT OWNER'S EXPENSE. TOWED VEHICLES MAY BE RECLAIMED AT
____*____
OR BY TELEPHONING____*____
____*____"

COLOR / FINISH AND CONTRAST: SHALL COMPLY WITH THE INTERNATIONAL SYMBOL ACCESSIBLITY (SEE DETAIL 1/HC-1)

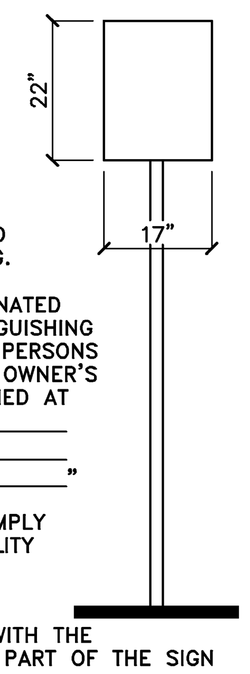

* BLANK SPACES ARE TO BE FILLED IN WITH THE APPROPRIATE INFOMATION AS A PERMENENT PART OF THE SIGN

D1189

2 TRAFFIC ENTRY WARNING SIGN 1/2"

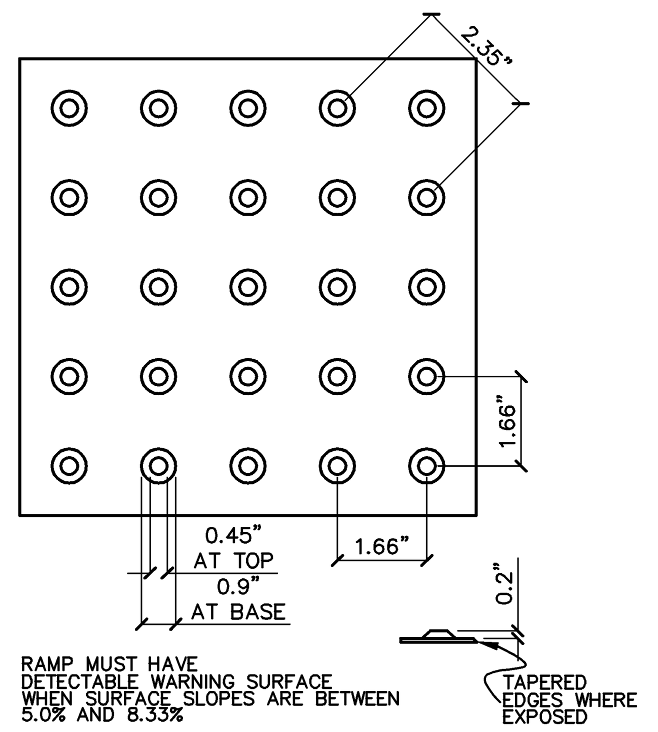

RAMP MUST HAVE DETECTABLE WARNING SURFACE WHEN SURFACE SLOPES ARE BETWEEN 5.0% AND 8.33%

15 TRUNCATED DOMES 3"

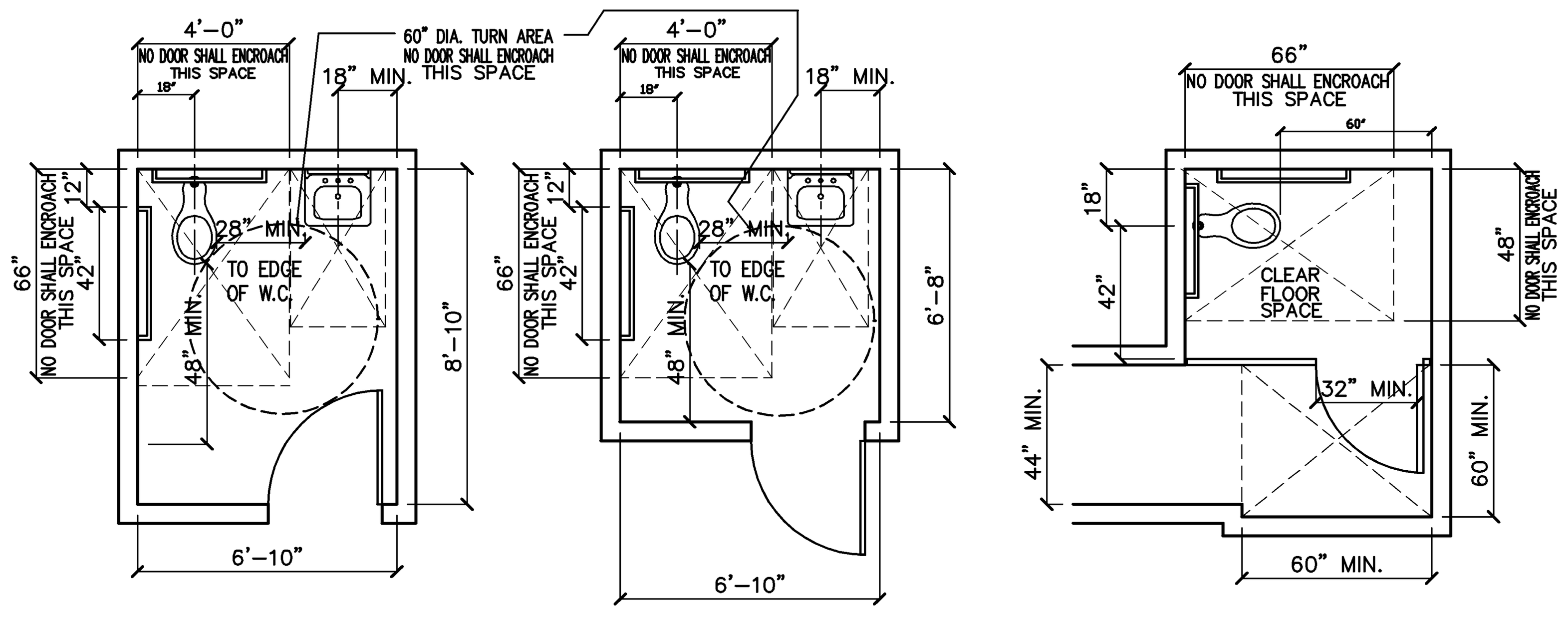

SINGLE ACCOMMODATION TOILET FACITLITY

SINGLE ACCOMMODATION TOILET FACITLITY

MULTIPLE TOILET STALL

D1219

11 ACCESSIBLE TOILET FACILITIES REQUIREMENTS

1.) PARKING SPACES SHALL BE LOCATED ON THE SHORTEST ACCESSIBLE ROUTE OF TRAVEL FROM ADJACENT PARKING TO AN ACCESSIBLE ENTRANCE.
2.) ACCESSIBLE PARKING SPACES SHALL BE AT LEAST 108 INCHES WIDE, (THE DEPTH SHALL BE AS DETERMINED BY THE LOCAL ENFORCING AGENCY AND SHALL NOT BE LESS THAN 18'-0")
3.) PARKING ACCESS AISLE SHALL BE PART OF AN ACCESSIBLE ROUTE TO THE BUILDING OR FACILITY ENTRANCE.
4.) WHERE MULTIPLE SPACES ARE REQUIRED TWO (2) SPACES MAY BE PROVIDED WITHIN A 26'-0" WIDE AREA. (23'-0" WHERE ACCESS ASILE IS 5'-0")
5.) PARKED VEHICLE OVERHANGS SHALL NOT REDUCE THE CLEAR WIDTH OF AN ACCESSIBLE ROUTE.
6.) BUMPERS ARE REQUIRED WHEN NO OTHER CURB OR BARRIER IS PROVIDED WHICH WILL PREVENT ENCROACHMENT OF CARS OVER WALKWAYS.
7.) PARKING SPACES AND ACCESS AISLES SHALL BE LEVEL WITH SURFACE SLOPES NOT EXCEEDING 1:50 (2.00%) IN ALL DIRECTIONS.
8.) ACCESSIBLE PARKING SPACES SHALL BE DESIGNATED AS RESERVED BY A SIGN SHOWING THE SYMBOL OF ACCESSIBILITY. (SEE DETAIL 3/HC-1)
9.) SPACES REQUIRED TO BE VAN ACCESSIBLE SHALL HAVE AN ADDITIONAL SIGN "VAN ACCESSIBLE" MOUNTED DIRECTLY BELOW THE SYMBOL OF ACCESSIBILITY.
10.) HANDICAPPED SPACE MUST PERMIT USE OF EITHER CAR DOORS.
11.) WHEELCHAIR USERS MUST NOT BE FORCED TO PASS BEHIND PARKED CARS OTHER THAN THEIR OWN.
12.) WHEN ONLY ONE STALL IS PROVIDED THE ACCESSIBLE ROUTE SHALL BE PLACED ON THE PASSENGER SIDE.
13.) CURB RAMPS SHALL BE PROVIDED WHENEVER AN ACCESSIBLE ROUTE CROSSES A CURB. (MAXIMUM SLOPE OF 1:12) (SIDE SLOPE OF RAMP 1:10)
14.) THE SURFACE OF EACH ACCESSIBLE PARKING SPACE OR STALL SHALL HAVE A SURFACE IDENTIFICATION DUPLICATING EITHER OF THE FOLLOWING SCHEMES: BY OUTLINING OR PAINTING THE STALL OR SPACE IN BLUE AND OUTLINING ON THE GROUND IN THE STALL OR SPACE IN WHITE OR SUITABLE CONTRASTING COLOR A PROFILE VIEW DEPICTING A WHELLCHAIR WITH OCCUPANT: OR BY OUTLINIG A PROFILE VIEW OF A WHEELCHAIR WITH OCCUPANT IN WHITE ON BLUE BACKGROUND. THE PROFILE VIEW SHALL BE LOCATED SO THAT IT IS VISIBLE TO A TRAFFIC ENFORCEMENT OFFICER WHEN A VEHICLE IS PROPERLY PARKED IN THE SPACE AND SHALL BE 36 INCHES HIGH BY 36 INCHES WIDE.

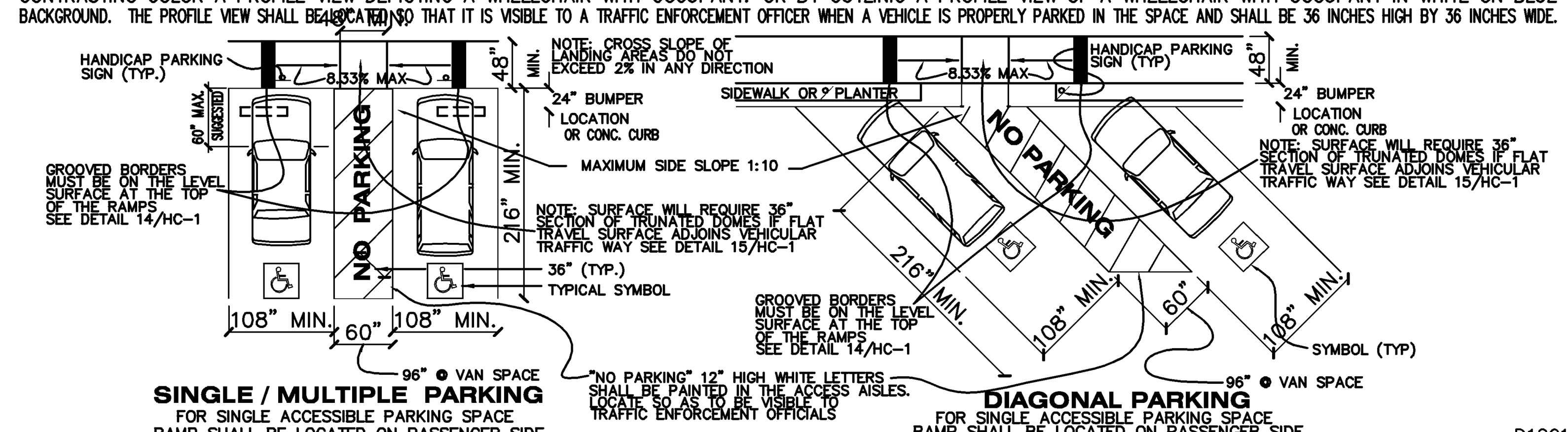

SINGLE / MULTIPLE PARKING
FOR SINGLE ACCESSIBLE PARKING SPACE
RAMP SHALL BE LOCATED ON PASSENGER SIDE

DIAGONAL PARKING
FOR SINGLE ACCESSIBLE PARKING SPACE
RAMP SHALL BE LOCATED ON PASSENGER SIDE

D1201

8 ACCESSIBLE PARKING STALL/SPACE REQUIREMENTS

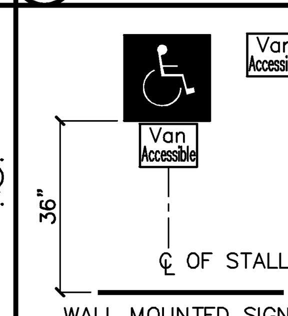

"VAN ACCESSIBLE" SIGN TO BE POSTED AT ALL SPACES REQUIRED TO BE VAN ACCESSIBLE, DIRECTLY BELOW THE INTERNATIONAL SYMBOL OF ACCESSIBILITY LETTER SIZE: LETTERS AND ON SIGNS SHALL HAVE A WITDH-TO -HEIGHT RATIO OF BETWEEN 3:5 AND 1:1 AND A STROKE WITDH-TO-HEIGHT RATIO BETWEEN 1:5 AND 1:10 CHARACTER HEIGHT: CHARACTERS AND NUMBERS ON SIGNS SHALL BE SIZED ACCORDING TO THE VIEWING DISTANCE FROM WHICH THEY ARE TO BE READ. THE MINIMUM HEIGHT IS MEASURED USING THE UPPER CASE 'X'. LOWER CASE CHARACTERS ARE PERMITTED. THE MINIMUM CHARACTER HEIGHT SHALL BE 3 INCHES.

"MINIMUM FINE $250" LOCATED AT A MINIMUM HEIGHT OF 80" TO BOTTOM OF SIGN AND IN FRONT OF EACH SPACE/ STALL

1.) EACH PARKING SPACE RESERVED FOR PERSONS WITH DISABILITES SHALL BE IDENTIFIED BY A REFLECTORIZED SIGN PERMANENTLY POSTED IMMEDIATELY ADJACENT TO AND VISIBLE FROM EACH STALL OR SPACE, CONSISTING OF A PROFILE VIEW OF A WHEELCHAIR WITH OCCUPANT IN WHITE ON DARK BLUE BACKGROUND. THE SIGN SHALL BE NO SMALLER THAN 70 SQUARE INCHES IN AREA AND, WHEN IN PATH OF TRAVEL, SHALL BE POSTED AT A MINIMUM HEIGHT OF 80 INCHES FROM THE BOTTOM OF THE SIGN TO THE PARKING SPACE FINISH GRADE. SIGNS MAY ALSO BE CENTERED ON THE WALL AT THE INTERIOR END OF THE PARKING SPACE AT A MINIMUM HEIGHT OF 36 INCHES FROM THE PARKING SPACE FINISH GRADE, GROUND OR SIDEWALK.
2.) ONE IN EVERY EIGHT ACCESSIBLE SPACES, BUT NOT LESS THAN ONE, SHALL BE SERVED BY AN ACCESS ASILE 96 INCHES WIDE MINIMUM AND SHALL BE DESIGNATED "VAN ACCESSIBLE" ALL SUCH
3.) SPACES MAY BE GROUPED ON ONE LEVEL OF A PARKING STRUCTURE. COLOR / FINISH AND CONTRAST: SHALL COMPLY WITH THE INTERNATIONAL SYMBOL ACCESSIBLITY (SEE DETAIL 1/HC-1)

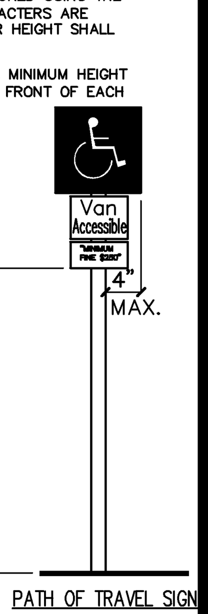

PATH OF TRAVEL SIGN

D1191

3 ACCESSIBLE PARKING STALL SIGN

16

NOTES:

1. ANY OBSTRUCTION THAT OVERHANGS A ROUTE BY WHICH A PEDESTRIAN MAY PASS SHALL BE AT LEAST 80 INCHES ABOVE WALKING SURFACE AS MEASURED TO BOTTOM OF OBSTRUCTION.
2. OBJECTS WITH THEIR LEADING EDGES BETWEEN 27" AND 80" FROM WALKING SURFACE SHALL NOT PROTRUDE MORE THAN 4" INTO WALKS, SIDEWALKS, COORIDORS AND HALLS.
3. OBJECTS WITH THEIR LEADING EDGES WITHIN 27" OF WALK MAY PROTRUDE ANY DISTANCE, BUT MAY NOT REDUCE THE REQUIRED CLEAR SPACE.
4. FREE STANDING OBJECTS ON POSTS OR PYLONS FROM 27" TO 80" ABOVE WALKS, COORIDORS AND HALLS MAY OVERHANG 12".
5. WALKS, HALLS, COORIDORS, PASSAGEWAYS, AISLES OR OTHER CIRCULATION SPACE SHALL HAVE 80" MIN. CLEAR HEAD ROOM.

FLOORS:

1. BUILDINGS SHALL BE ONE COMMON FLOOR LEVEL THROUGHOUT, UNLESS VARYING LEVELS ARE PROVIDED WITH CONFORMING RAMPS, ELEVATORS OR LIFTS.
2. ALL FLOORS SHALL BE SLIP-RESISTANT.

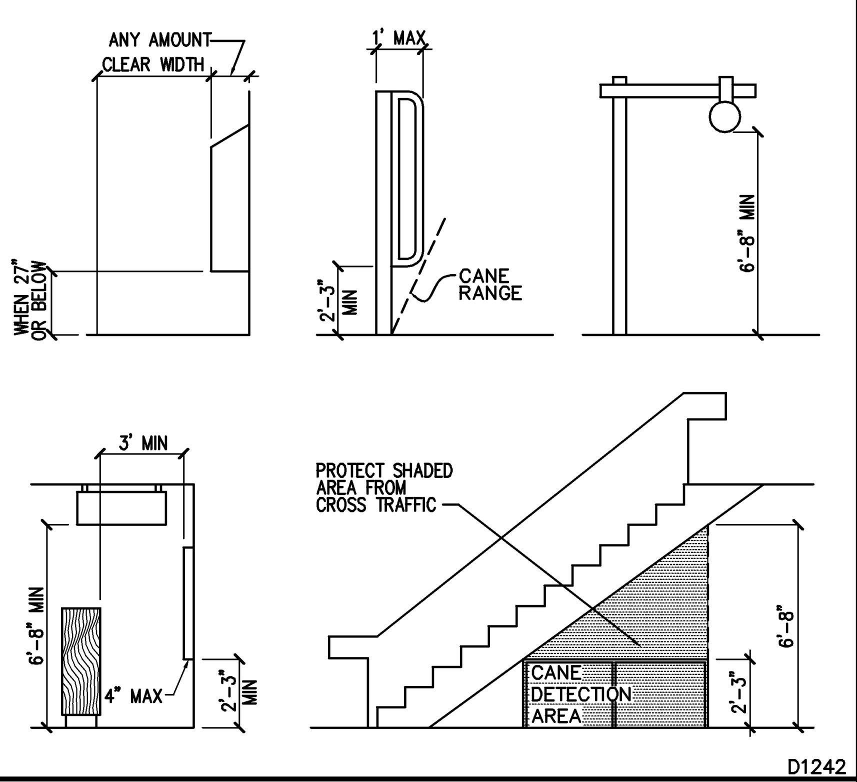

D1242

12 HAZARDS / PROPTRUDING OBJECTS / HEAD ROOM

DOORWAYS LEADING TO MEN'S SANITARY FACILITIES, SHALL BE IDENTIFIED BY AN EQUILATERAL TRIANGLE 1/4 INCH THICK WITH EDGES 12 INCHES LONG AND A VERTEX POINTING UPWARD. WOMEN'S SANITARY FACILITIES SHALL BE IDENTIFIED BY A CIRCLE, 1/4 INCH THICK AND 12 INCHES IN DIAMETER. UNISEX SANITARY FACILITIES SHALL BE IDENTIFIED BY A CIRCLE 1/4 INCH THICK, 12 INCHES IN DIAMETER WITH A 1/4 INCH THICK TRIANGLE SUPERIMPOSED ON THE CIRCLE AND WITHIN THE 12 INCH DIAMETER. THESE GEOMETRIC SYMBOLS SHALL BE CENTERED ON THE DOOR AT A HEIGHT OF 60 INCHES AND THEIR COLOR AND CONTRAST SHALL BE DISTINCTLY DIFFERENT FROM THE COLOR AND CONTRAST OF THE DOOR.

COLOR / FINISH AND CONTRAST; SHALL COMPLY WITH THE INTERNATIONAL SYMBOL ACCESSIBILITY (SEE DETAIL 1/HC-1)

A WALL SIGN FOR EVERY SANITARY FACILITY SHALL BE INSTALLED IN CONFORMANCE WITH SECTION 1117B.5.1, INCLUDING BUT NOT LIMITED TO:
-RAISED CHARACTERS AND PICTORIAL SYMBOL SIGNS, SECTION 1117B.5.5
-BRAILL, SECTION 1117B.5.6
-MOUNTING LOCATION AND HEIGHT, SECTION 1117B.5.7
-INSTALLED ON THE WALL ADJACENT TO THE LATCH SIDE OF THE DOOR
-MOUNTING HEIGHT SHALL BE CENTERED 60" ABOVE THE FLOOR

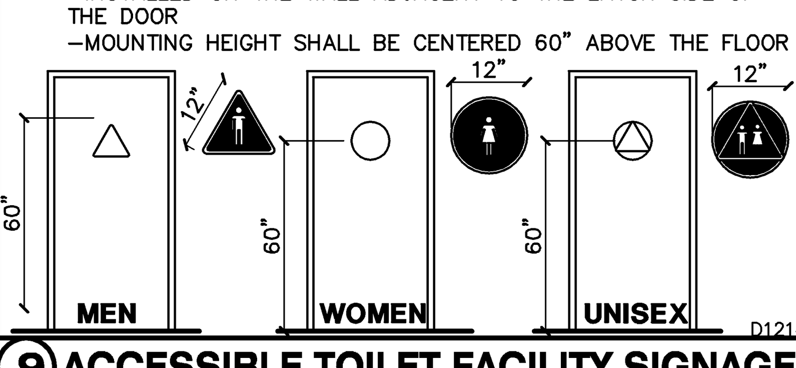

D1214

9 ACCESSIBLE TOILET FACILITY SIGNAGE

ALL BUILDING ENTRANCES THAT ARE ACCESSIBLE TO AND USABLE BY PHYSICALLY HANDICAPPED / PHYSICALLY DISABLED PERSONS SHALL BE IDENTIFIED WITH AT LEAST ONE STANDARD SIGN AND WITH ADDITIONAL DIRECTIONAL SIGNS, AS REQUIRED, TO BE VISIBLE TO PERSONS ALONG APPROACHING PEDESTRIAN WAYS.

THE INTERNATIONAL SYMBOL OF ACCESSIBLITY SHALL BE THE STANDARD USED TO IDENTIFY FACILITIES THAT ARE ACCESSIBLE TO AND USABLE BY PHYSICALLY DISABLED PERSONS. (SEE DETAIL 1/HC-1)

CONTRACTED GRADE 2 BRAILLE SHALL BE USED WHENEVER BRAILLE SYMBOLS ARE SPECIFICALLY REQUIRED. DOTS SHALL BE 1/10 INCH ON CENTERS IN EACH CELL WITH 2/10 INCH SPACE BETWEEN CELLS. DOTS SHALL SHALL BE RASIED A MINIMUM OF 1/40 INCH ABOVE THE BACKGROUND.

LETTERS AND NUMBERS ON SIGNS SHALL HAVE A WIDTH-TO-HEIGHT RATIO OF BETWEEN 3:5 AND 1:1 AND A STROKE-WIDTH-TO-HEIGHT RATIO BETWEEN 1:5 AND 1:10.

WHEN RAISED OR RECESSED CHARACTERS OR SYMBOLS ARE USED, THEY SHALL CONFORM TO THE FOLLOWING:
A. LETTER TYPE. LETTERS AND NUMBERS ON SIGNS SHALL BE RAISED OR RECESSED 1/32 INCH MINIMUM AND SHALL BE SANS-SERIF CHARACTERS.
B. SYMBOL SIZE. RAISED CHARACTERS OR SYMBOLS SHALL BE A MINIMUM OF 5/8 INCH HIGH. RECESSED CHARACTERS OR SYMBOLS SHALL HAVE A 1/4 INCH MINIMUM STROKE WIDTH.

INFORMATION POSTED: BUILDINGS THAT HAVE BEEN REMODELED TO PROVIDE SPECIFIC SANITARY FACILITIES AND/OR ELEVATORS FOR PUBLIC USE THAT CONFORM TO THE CURRENT ENFORCED CODES SHALL HAVE THIS INFORMATION POSTED IN THE BUILDING LOBBY, PREFERABLY AS PART OF THE BUILDING DIRECTORY.

MOUNTING LOCATION AND HEIGHT: WHERE PERMANENT IDENTIFICATION IS PROVIDED FOR ROOMS AND SPACES, SIGNS SHALL BE INSTALLED ON THE WALL ADJACENT TO THE LATCH SIDE OF THE DOOR. WHERE THERE IS NO WALL SPACE TO THE LATCH SIDE OF THE DOOR, INCLUDING AT DOUBLE LEAF DOORS, SIGNS SHALL BE PLACED ON THE NEAREST ADJACENT WALL. MOUNTING HEIGHT SHALL BE 60 INCHES ABOVE FINISH FLOOR TO THE CENTER-LINE OF THE SIGN. MOUNTING LOCATION FOR SUCH SIGNAGE SHALL BE SO THAT A PERSON MAY APPROACH WITHIN 3 INCHES OF SIGNAGE WITHOUT ENCOUNTERING PROTRUDING OBJECTS OR STANDING WITHIN THE SWING OF A DOOR.

SIGNS DISPLAYING THE INTERNANTIONAL SYMBOL OF ACCESSIBILITY SHALL COMPLY WITH CALIFORNIA BUILDING CODE SECTIONS 1127B.3, 1117B.5.1 AND 1117B.8.1

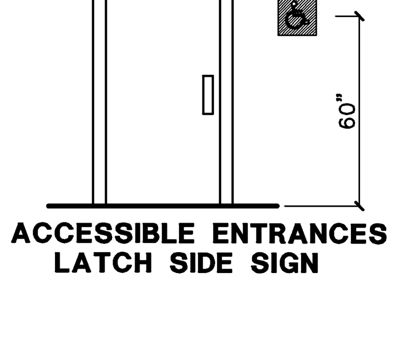

ACCESSIBLE ENTRANCES LATCH SIDE SIGN

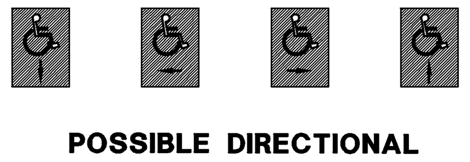

POSSIBLE DIRECTIONAL SIGNS

D1200

4 ENTRANCE SIGNS AND DIRECTIONAL SIGNS

Pasquini Engineering
Marc A. Pasquini Civil Engineer
Telephone: (661) 328-9600
Fax: (661) 328-9030
903 "H" Street, Suite 300
Bakersfield, CA. 93304

DATE	ISSUED

DATE	MARK	ISSUED

DWG. BY	
CHK'D BY	
DATE	12/06/09
JOB NO.	
FILE NO.	HC-1

EXP. 12/31/10

SHEET
HC-1
OF 1 SHEET

PRINTED: 10/28/2010